INTRODUCTION

How to Use This Manual

This supplement contains information for the 94 ACCORD. Refer to following shop manual for service procedures and data not included in this supplement.

Description	Code No.
93 ACCORD Shop Manual MAINTENANCE, REPAIR and CONSTRUCTION	62SN700
93 ACCORD Shop Manual SUPPLEMENT	62SN720

The first page of each section is marked with a black tab that lines up with one of the thumb index tabs on this page. You can quickly find the first page of each section without looking through a full table of contents. The symbols printed at the top corner of each page can also be used as a quick reference system.

Special Information

⚠ WARNING Indicates a strong possibility of severe personal injury or loss of life if instructions are not followed.

CAUTION: Indicates a possibility of personal injury or equipment damage if instructions are not followed.

NOTE: Gives helpful information.

CAUTION: Detailed descriptions of *standard workshop* procedures, safety principles and service operations are not included. Please note that this manual contains warnings and cautions against some specific service methods which could cause PERSONAL INJURY, damage a vehicle or make it unsafe. Please understand that these warnings cannot cover all conceivable ways in which service, whether or not recommended by HONDA, might be done, or of the possible hazardous consequences of every conceivable way, nor could HONDA investigate all such ways. Anyone using service procedures or tools, whether or not recommended by HONDA, *must satisfy himself thoroughly* that neither personal safety nor vehicle safety will be jeopardized.

marked sections are not included in this manual.

As sections with * include SRS components; special precautions are required, when servicing.

First Edition 2/94 336 pages

HONDA MOTOR CO., LTD.
Service Publication Office

*General Info
Special Tools
Specifications
Maintenance
Engine
Cooling
Fuel and Emissions
Transaxle
*Steering
Suspension
Brakes (Including ABS)
*Body
*Heater and Air Conditioning
*Electrical (Including SRS)

Outline of Model Changes

The following summarizes changes made on the 93 ACCORD Shop Manual (Code No. 62SN700) and 93 ACCORD Shop Manual Supplement (Code No. 62SN720).

ITEM	DESCRIPTION	CODE NO.		REFERENCE SECTION
		62SN720	62SN721	
General	2.3 ℓ model added	○		—
	2.0 ℓ KS model added	○		—
Engine	H23A3 engine type added F20Z1, F20Z2 engines valve clearance modified	○		—
	Rear mount bracket Changed		○	5
	Changed • Torque value of radiator fan self locking nut • Connecting pipe (H23A3 engine) • Water pump		○	10
PGM-FI	Changed for 2.3 ℓ model addition • Vacuum connections • Electrical connections • Heated oxygen sensor (HO2S) • TDC/CKP/CYP sensor • Starting air valve • Fast idle thermo valve • Throttle body • Intake air bypass (IAB) control system • Intake air control system	○		—
	Main wire harness changed		○	11
Manual Transmission	Countershaft 2nd gear synchro system changed		○	13
Automatic Transmission	Changed for 2.3 ℓ model addition • Road test shift schedule • Stall speed RPM • Pressure testing fluid pressure • 1st/2nd clutch assembly	○		—
	Circuit diagram modified Changed • Reverse idler gear shift and holder • Main valve body assembly • Secondary shaft assembly • Clutch discs and pistons • Throttle control cable inspection and adjustment Discontinued • Right side cover protector • Magnet on ATF strainer		○	14

The following summarizes changes made on the 93 ACCORD Shop Manual (Code No. 62SN700) and 93 ACCORD Shop Manual Supplement (Code No. 62SN720).

ITEM	DESCRIPTION	CODE NO.		REFERENCE SECTION
		62SN720	62SN721	
Brake	Application of brake pads changed due to 2.3 ℓ model addition	○		——
	Changed • Torque value of rear brake caliper bracket mounting bolt for conventional brakes • Anti-lock Brake System (ABS)		○	19
Body	Added • Front spoiler for 2.3 ℓ model • Trunk spoiler for 2.3 ℓ model	○		——
	Some protectors of doors added		○	20
Electrical	Changed • Ignition system (2.3 ℓ model) • Power supply circuit • Starter mounting bolt torque value changed (M/T) Keyless entry system added (KE)	○		——
	Added • Cruise control system (KE model) • Supplemental Restraint System (SRS) Type III Changed • Power supply circuit • AT gear position indicator circuit • Trunk light • Location of head light washer switch (KE model) • Horn system • Supplemental Restraint System (SRS) Type II		○	23

General Information

Chassis and Engine Numbers 1-2
Identification Number Locations 1-4
Warning/Caution Label Locations
  SRS Airbag System Type II 1-5
  SRS Airbag System Type III 1-7
  Except SRS Airbag System 1-13
Abbreviations 1-14

Chassis and Engine Numbers

Vehicle Identification Number (VIN)

SHHCC75400U100001

Manufacturer, Make and Type of Vehicle
- SHH: HONDA OF THE U.K.MFG., LTD. England. HONDA Passenger car

Body Type
- CC7: ACCORD

Body and Transmission Type
- 5: 4-door Sedan 5-speed Manual
- 6: 4-door Sedan 4-speed Automatic

Vehicle Grade
- 4: 2.0i
- 5: 2.0i S
- 6: 2.0i LS
- 7: 2.0i ES
- 8: 2.3i SR

Fixed Code

Auxiliary Number

Factory Code
- U: Honda of the U.K. Manufacturing in England

Model Year
- 1: 1994

Serial Number

Engine Number

F20Z1-E200001

Engine Type
- F20Z1: 2.0 ℓ Sequential Multi-port Fuel-injected 131 PS engine Unleaded gasoline with CATA
- F20Z2: 2.0 ℓ Sequential Multi-port Fuel-injected 115 PS engine Unleaded gasoline with CATA
- H23A3: 2.3 ℓ Sequential Multi-port Fuel-injected 158 PS engine Unleaded gasoline with CATA

Serial Number

Transmission Number

MP6A-3000001

Transmission Type
- MP6A: Automatic for F20Z1, H23A3 engines
- N2C4: Manual for F20Z2 engine
- N2D4: Manual for H23A3 engine
- N2S4: Manual for F20Z1 engine

Serial Number
- Automatic: 3000001 ~
- Manual: 2000001 ~

MODEL	GRADE NAME	APPLICABLE AREA CODE	TRANS-MISSION TYPE	VEHICLE IDENTIFICATION NUMBER	ENGINE NUMBER	TRANSMISSION NUMBER
ACCORD (without ABS)	2.0i	KG	5MT	SHHCC75400U100001~	F20Z2-E200001~	N2C4-2000001~
	2.0i LS	KG	5MT	SHHCC75600U100001~	F20Z2-E200001~	N2C4-2000001~
	2.0i S	KG	5MT	SHHCC75500U100001~	F20Z1-E200001~	N2S4-2000001~
		KS	5MT	SHHCC75500U100001~	F20Z1-E200001~	N2S4-2000001~
ACCORD (with ABS)	2.0i	KG*1	5MT	SHHCC75400U100001~	F20Z2-E200001~	N2C4-2000001~
		KE*1	5MT	SHHCC75400U100001~	F20Z2-E200001~	N2C4-2000001~
	2.0i LS	KG*1	5MT	SHHCC75600U100001~	F20Z2-E200001~	N2C4-2000001~
		KG*1,*2	5MT	SHHCC75600U100001~	F20Z2-E200001~	N2C4-2000001~
	2.0i S	KG*1	5MT	SHHCC75500U100001~	F20Z1-E200001~	N2S4-2000001~
			4AT	SHHCC76500U100001~	F20Z1-E200001~	MP6A-3000001~
	2.0i LS	KG	5MT	SHHCC75600U100001~	F20Z1-E200001~	N2S4-2000001~
		KG*1	5MT	SHHCC75600U100001~	F20Z1-E200001~	N2S4-2000001~
			4AT	SHHCC76600U100001~	F20Z1-E200001~	MP6A-3000001~
		KG*2,*3	5MT	SHHCC75600U100001~	F20Z1-E200001~	N2S4-2000001~
		KG*1,*3	5MT	SHHCC75600U100001~	F20Z1-E200001~	N2S4-2000001~
			4AT	SHHCC76600U100001~	F20Z1-E200001~	MP6A-3000001~
		KS*1	5MT	SHHCC75600U100001~	F20Z1-E200001~	N2S4-2000001~
		KS*1,*3	5MT	SHHCC75600U100001~	F20Z1-E200001~	N2S4-2000001~
			4AT	SHHCC76600U100001~	F20Z1-E200001~	MP6A-3000001~
		KE*1,*4	5MT	SHHCC75600U100001~	F20Z1-E200001~	N2S4-2000001~
			4AT	SHHCC76600U100001~	F20Z1-E200001~	MP6A-3000001~
	2.0i ES	KG*1,*2,*3	5MT	SHHCC75700U100001~	F20Z1-E200001~	N2S4-2000001~
			4AT	SHHCC76700U100001~	F20Z1-E200001~	MP6A-3000001~
		KE*1,*2,*3	5MT	SHHCC75700U100001~	F20Z1-E200001~	N2S4-2000001~
			4AT	SHHCC76700U100001~	F20Z1-E200001~	MP6A-3000001~
	2.3i SR	KG*1,*2,*3	5MT	SHHCC75800U100001~	H23A3-E200001~	N2D4-2000001~
		KS*1,*3	5MT	SHHCC75800U100001~	H23A3-E200001~	N2D4-2000001~
		KE*1,*2,*3	5MT	SHHCC75800U100001~	H23A3-E200001~	N2D4-2000001~
			4AT	SHHCC76800U100001~	H23A3-E200001~	MP6A-3000001~

*1: With sunroof
*2: With air conditioning
*3: With driver and front passenger SRS airbag system (Type III)
*4: With driver SRS airbag system (Type II)

Identification Number Locations

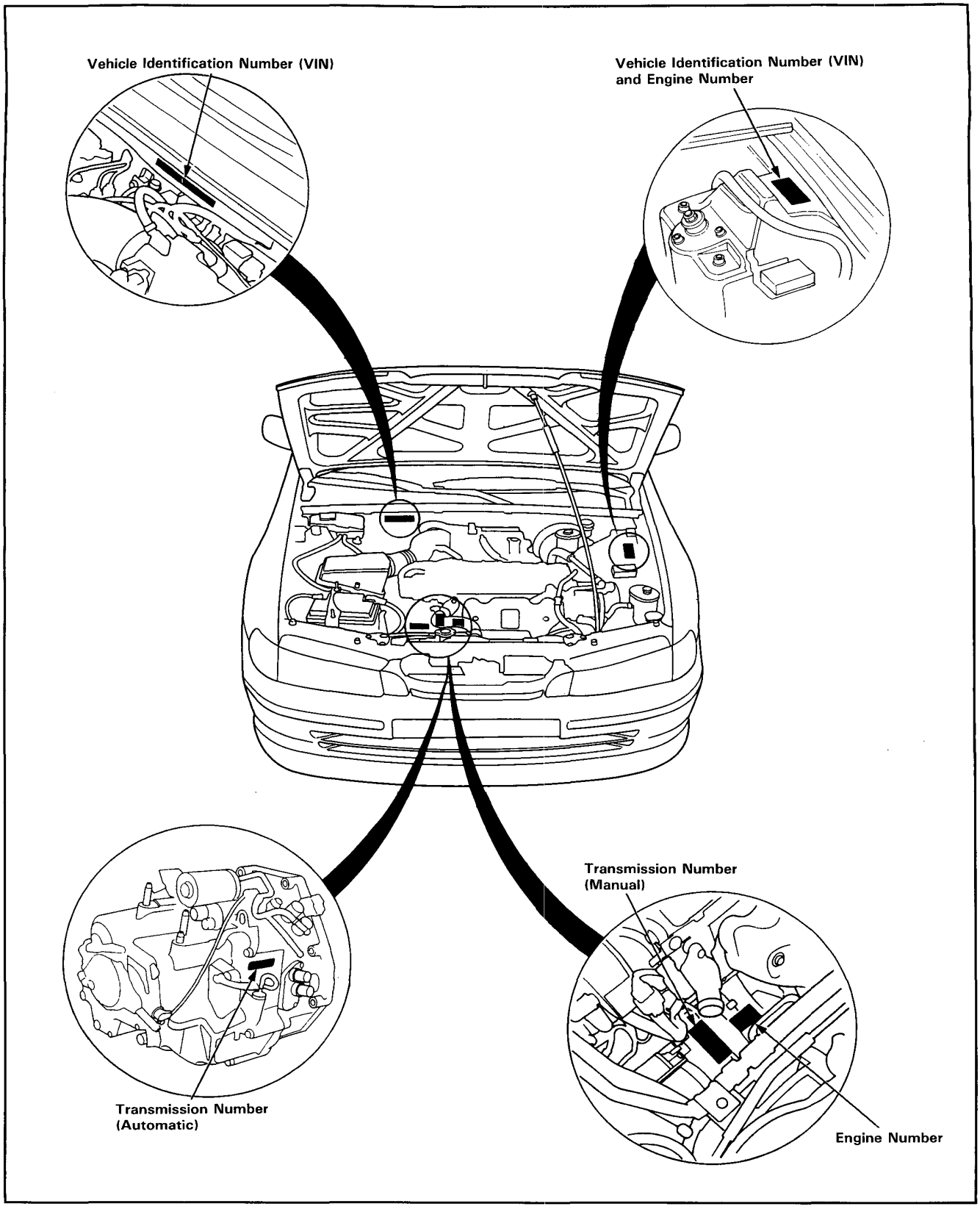

Warning/Caution Label Locations

SRS Airbag System Type II

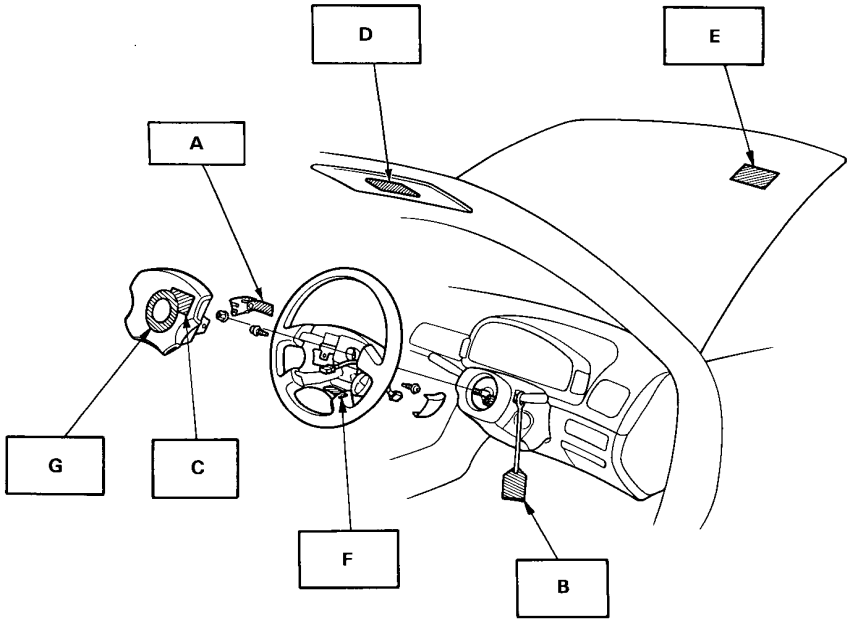

A: MAINTENANCE LID CAUTION
Option on some model versions:

注意 SRS
SRSメインテナンスは、イグニッション スイッチを切ってから行うこと。
CAUTION SRS
BEFORE MAINTENANCE, SWITCH OFF THE IGNITION.
ATTENTION
AVANT TOUT ENTRETIEN, COUPER LE CONTACT.
ACHTUNG
VOR WARTUNG ZÜNDUNG AUSSCHALTEN.
LET OP
ZET HET KONTAKTSLOT AF ALVORENS MET HET ONDERHOUD TE BEGINNEN.

B: SRS CAUTION TAG
Option on some model versions

C: MONITOR CAUTION

NOTICE
- REFER TO SERVICE (SHOP) MANUAL FOR DETAILED INSTRUCTIONS.

REMARQUE
- POUR LES INSTRUCTIONS DÉTAILLÉES, SE REPORTER AU MANUEL DE REPARAIONS.

LET OP
- RAADPLEEG HET WERKPLAASHANDBOEK VOOR NADERE AANWIJINGEN.

ACHTUNG
- AUSFÜHRLICHE ANWEISUNGEN SIND DEM WERKSTATTHANDBUCH ZU ENTNEHMEN.

D: DRIVER INFORMATION (SUNVISOR)
Standard equipment:

SRS ALWAYS WEAR YOUR SEAT BELT
- THIS CAR IS EQUIPPED WITH A DRIVER AIRBAG AS A SUPPLEMENTAL RESTRAINT SYSTEM (S.R.S.).
- IT IS DESIGNED TO SUPPLEMENT THE SEAT BELT.
- IF YOUR SRS INDICATOR LIGHTS WHILE DRIVING SEE YOUR AUTHORIZED HONDA DEALER.

(cont'd)

SRS Airbag System Type II (cont'd)

E: SRS WARNING (HOOD)
Standard equipment:

WARNING SRS
THIS VEHICLE IS EQUIPPED WITH AN AIRBAG AS A SUPPLEMENTAL RESTRAINT SYSTEM (S.R.S.).
ALL S.R.S. ELECTRICAL WIRING AND CONNECTORS ARE COLORED YELLOW. DO NOT USE ELECTRICAL TEST EQUIPMENT ON THESE CIRCUITS. TAMPERING WITH OR DISCONNECTING THE S.R.S. WIRING COULD RESULT IN ACCIDENTAL FIRING OF THE INFLATOR OR MAKE THE SYSTEM INOPERATIVE, WHICH MAY RESULT IN SRIOUS INJURY.

ATTENSION SRS
CE VEHICULE EST EQUIPE D'UN COUSSIN D'AIR DU COTE CONDUCTEUR QUI CONSTITUE UN SYSTEME DE RETENUE COMPLEMENTAIRE (S.R.S.).
TOUR LES FILS ET CONNECTEURS ELECTRIQUES DU SYSTEME DE RETENUE COMPLEMENTAIRE (S.R.S.) SONT DE COULEUR JAUNE. N'UTILISEZ PAS UN EQUIPEMENT D'ESSAIS ELECTRIQUES SUR CES CIRCUITS. NE TOUCHEZ PAS ET NE DEBRANCHEZ PAS LES FILS DU SYSTEME S.R.S. CAR CECI POURRAIT DE TRADUIRE PAR LE DECLENCHEMENT ACCIDENTEL DU GONFLEUR OU RENDRE LE SYSTEME INOPERANT ET VOUS EXPOSER AINSI A DE GRAVES BLESSURES.

WARNUNG SRS
DIESES FAHRZEUG IST MIT EINEM FAHRER-AIRBAG (S.R.S.) ALS ZUSÄTZLICHEM RÜCKHALTESYSTEM AUSGERÜSTET.
ALLE ELEKTRISCHEN KABEL, SOWIE DIE ZUGEHÖRIGEN STECKVERBINDER DES S.R.S. -SYSTEMS SIND IN GELBER FARBE AUSGEFÜHRT.
KEINE ELEKTRISCHEN PRÜGERÄTE AN DIE S.R.S. -VERKABELUNG ANSCHLIEBEN. VERÄNDERN ODER UNTERBRECHEN DER S.R.S. -VERKABELUNG KANN UNKONTROLLIERTES ZÜNDEN DES GASGENERATORS AUSLÖSEN. ODER DAS SYSTEM AUBER FUNKTION SETZEN. WAS ZU ERNSTHAFTEN VERLETZUNGEN FÜHREN KANN.

WAARSCHUWING SRS
DIT VOERTUIG IS UITGERUST MET EEN LUCHTKUSSEN AAN DE BESTUURDERSKANT ALS EXTRA BESCHERMING (S.R.S.).
ALLE ELEKTRISCHE LEIDINGEN EN AANSLUITINGEN VAN DE S.R.S. ZIJN GEEL GEKLEURD. GEBRUIK GEEN ELEKTRISCHE TESTAPPARATUUR VOOR DEZE CIRCUITS. KNOEIEN MET OF LOSKOPPELEN VAN DE S.R.S. LEIDINGEN KAN LEIDEN TOT BRAND IN DE VULINRICHTING OF TOT UITSCHAKELEN VAN HET SYSTEEM: DIT KAN TO ERNSTIGE ONGELUKKEN LEIDEN.

F: COVER CAUTION

SRS
注意 CAUTION
ACHTUNG
- SRSメインテナンス時は　サービス　マニュアルを参照すること。
- REFER TO THE SHOP MANUAL.
- SE REPORTER AU MANUEL D'ATELIER.
- WERKSTATT HANDBUCH LESEN.
- LEES HET WERKPLAATSHANDBOEK.

G: BAM INFLATOR LABEL

AIRBAG GENERATOR IFM,
BAM-PT1-0393
NIPPON KOKI, SHIRAKAWA JAPAN
HERSTELLUNGSJAHR: 1991
EINFUHRER: HONDA DEUTSCHLAND GMBH/OFFENBACH

DER GASGENERATOR DARF NUR FÜR INSASSENRÜCKHALTESYSTEME MIT LUFTSACK IN KRAFTFAHRZEUGE MONTIERT WERDEN.
DIE MONTAGE UND DEMONTAGE DES GASGENERATORS DARF NUR VON DAFÜR GESCHULTEM PERSONAL VORGENOMMEN WERDEN.

DANGER CONTAINS SODIUM AZIDE AND POTASSIUM PERCHLORATE.
CONTENTS ARE EXTREMELY FLAMMABLE.
DO NOT DISMANTLE OR INCINERATE.
DO NOT BROBE WITH ELECTRICAL DEVICES.

危険物：アジ化ソーダと過塩素酸カリウムを含んでいます。
強燃性です。分解、焼却しないで下さい。
電気（抵抗）検査をしないで下さい。

SRS Airbag System Type III

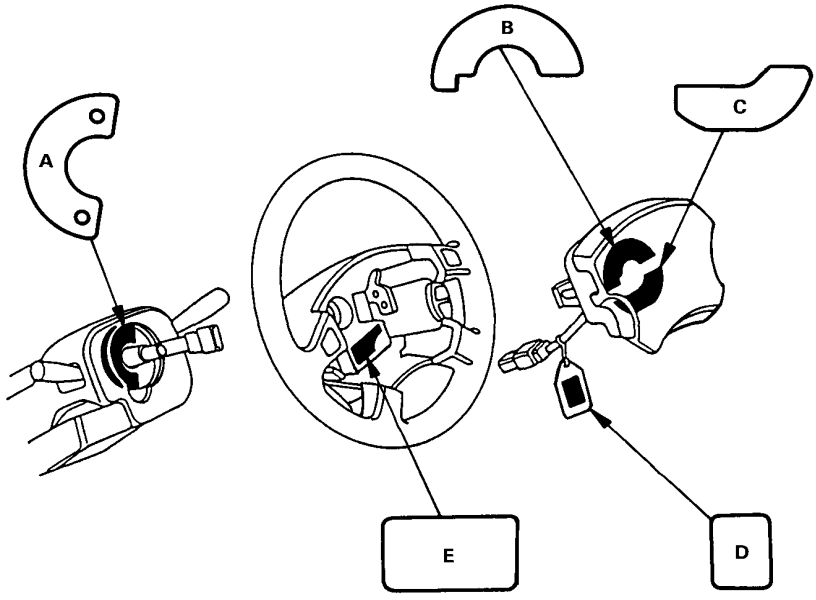

A: CABLE REEL CAUTION

SRS
REFER TO SERVICE (SHOP) MANUAL FOR DETAILED INSTRUCTIONS.

POUR LES INSTRUCTIONS DETAILL'EES, SE REPORTER AU MANUEL DE REPARATIONS.

取扱い、保管はサービスマニュアルを参照してください。

AUSFÜHRLICHE ANWEISUNGEN SIND DEM WERKSTATTHNBUCH ZU ENTNEMEN.

RAADPLEEG HET WERKPLAATSHANDBOEK VOOR NADERE AANWIJZINGEN.

B: DRIVER MODULE DANGER
Except KS model:

SRS
- DANGER
  EXPLOSIVE/FLAMMABLE
  POISON
  REFER TO SHOP MANUAL.
- DANGER
  EXPLOSIF ET INFLAMMABLE
  POISON
  SE REPORTER AU MANUEL D'ATELIER.
- GEFAHR
  EXPLOSIV/ENTZUNDBAR
  GIFT
  WERKSTATTHANDBUCH LESEN.
- GEVAAR
  EXPLOSIEGEVAAR/BRANDBAAR
  GIFTIG
  LEES HET WERKPLAATSHANDBOEK.

KS model:

- DANGER
  EXPLOSIVE/FLAMMABLE POISON
  REFER TO THE SHOP MANUAL.
- FARLIGT
  EXPLOIVT/LÄTTANTÄNDLIGT GIFTIGT SE VERKSTADSHANDBOKEN.
- VAARA
  HELPOSTI RÄJÄHTÄVÄ/SYTTYVÄ MYRKKY GIFT KATSO TYÖKÄSIKIRJAA.
- مادة خطيرة
  مادة متفجرة/قابلة للاشتعال
  مادة سامة
  لمزيد من المعلومات نرجو مراجعة كتيب دليل الاستخدام في الورشة.

C: DRIVER MODULE WARNING
Except KS model:

WARNING SRS
- REFER TO THE SHOP MANUAL.
- SE REPORTER AU MANUEL D'ATELIER.
- WERKSTATTHANDBUCH LESEN.
- LEES HET WERKPLAATSHANDBOEK.

KS model:

WARNING SRS
- REFER TO THE SHOP MANUAL.
- SE VERKSTADSHANDBOKEN.
- KATSO TYÖKÄSIKIRJAA.
- لمزيد من المعلومات نرجو مراجعة كتيب دليل الاستخدام في الورشة.

(cont'd)

SRS Airbag System Type III (cont'd)

D: BAM INFLATOR LABEL (DRIVER)

AIR BAG GAS GENERATOR UT11600
MORTON INTERNATIONAL, INC.
OGDEN UT. USA
HERSTELLUNGSJAHR: 1992
EINFÜHRER: HONDA DEUTSCHLAND GMBH/OFFENBACH
BAM PT1-0388

DER GASGENERATOR DARF NUR FÜR INSASSENRÜCKHALTESYSTEME MIT LUFTSACK IN KRAFTFAHRZEUGE MONTIERT WERDEN.
DIE MONTAGE UND DEMONTAGE DES GASGENERATORS DARF NUR VON DAFÜR GESCHULTEM PERSONAL VORGENOMMEN WERDEN.

CAUTION CONTAINS FLAMMABLE SOLIDS US DOT-E-8214	THE GAS GENERATOR SHOULD ONLY BE INSTALLED IN VEHICLES EQUIPPED WITH THE AIRBAG SYSTEM. THE GAS GENERATOR IS TO BE INSTALLED AND/OR DISASSEMBLED ONLY BY TRAINED PERSONNEL.
ATTANTION CONTENT DE SOLIDES FLAMMABLE US DOT-E-8214	LE GENERATEUR DE GAZ NE PEUT ETRE INSTALLE QUE SUR DES VEHICULES EQUIPES D'UN SYSTEME AIRBAG. LE MONTAGE ET LE DEMONTAGE DU GENERATEUR DE GAZ NE PEUT ETRE EFFECTUE QUE PAR UN PERSONNEL QUALIFIE.

E: STEERING WHEEL WARNING

WARNING SRS
- REFER TO THE SHOP MANUAL.
- SE REPORTER AU MANUEL D'ATELIER.
- WERKSTATTHANDBUCH LESEN.
- LEES HET WERKPLAATSHANDBOEK.

Label D and E locations: Refer to page 1-7

F: STEERING COLUMN CAUTION
KG model:

CAUTION SRS
TO AVOID DAMAGING THE S.R.S. CABLE OR REEL, WHICH COULD MAKE THE SYSTEM INOPERATIVE, REMOVE THE STEERING WHEEL BEFORE REMOVING THE STEERING SHAFT CONNECTOR BOLT.

ATTENTION SRS
POUR NE PAS RISQUER D'ENDOMMAGER LE CABLE OU L'ENROULEUR DU S.R.S. ET DE RENDRE AINSI LE SYSTEME INOPERANT, RETIREZ LE VOLANT AVANT DE DEVISSER LE BOULON D'ACCOUPLEMENT D'ARBRE DE DIRECTION.

ACHTUNG SRS
UM BESCHÄDIGUNGEN DER S.R.S-KABELROLLE ODER DES KABELS. WELCHE DAS S.R.S -SYSTEM AUBER FUNKTION SETZEN WÜRDEN, ZU VERMEIDEN, VOR ARBEITEN AN DER LENKSPINDEL DAS LENKRAD AUSBAUEN.

WAARSCHUWING SRS
OM TE VOORKOMEN DAT DE S.R.S. -KABLE OF -HASPEL BESCHADIGD WORDEN, HETGEEN ERTOE ZOU LEIDEN DAT HET SYSTEEM UITVALT, DIENT U HET STUUR TE VERWIJDEREN VOORDAT U DE STUURSCHACHT-CONNECTORBOUT VERWIJDERT.

KE model:

CAUTION SRS
TO AVOID DAMAGING THE S.R.S. CABLE OR REEL, WHICH COULD MAKE THE SYSTEM INOPERATIVE, REMOVE THE STEERING WHEEL BEFORE REMOVING THE STEERING SHAFT CONNECTOR BOLT.

ATTENTION SRS
POUR NE PAS RISQUER D'ENDOMMAGER LE CABLE OU L'ENROULEUR DU S.R.S. ET DE RENDRE AINSI LE SYSTEME INOPERANT, RETIREZ LE VOLANT AVANT DE DEVISSER LE BOULON D'ACCOUPLEMENT D'ARBRE DE DIRECTION.

KS model:

OBSERVERA SRS
FÖR ATT UNDVIKA SKADOR PA SRS-SYSTEMETS KABEL ELLER TRUMMA. NAGOT SOM KAN GÖRA ATT SYSTEMET INTE FUNGERAR. SKALL RATTEN TAS BORT INNAN RATTAXELNS BULT TAS BORT.

VAROITUS SRS
SRS-KAAPELIN JA RULLAN VAHINGOITTUMISEN OSTÄMISEKSI, JOTTA JÄRJOSTELMÄ EI MENISI KÄYTTÖKELVOTTOMAKSI, IRROTETAAN OHJAUSPYÖRÄ ENNON KUIN IRROTETAAN OHJAUSVARREN LIITTIMEN PULTTI.

Label F location: Refer to page 1-9

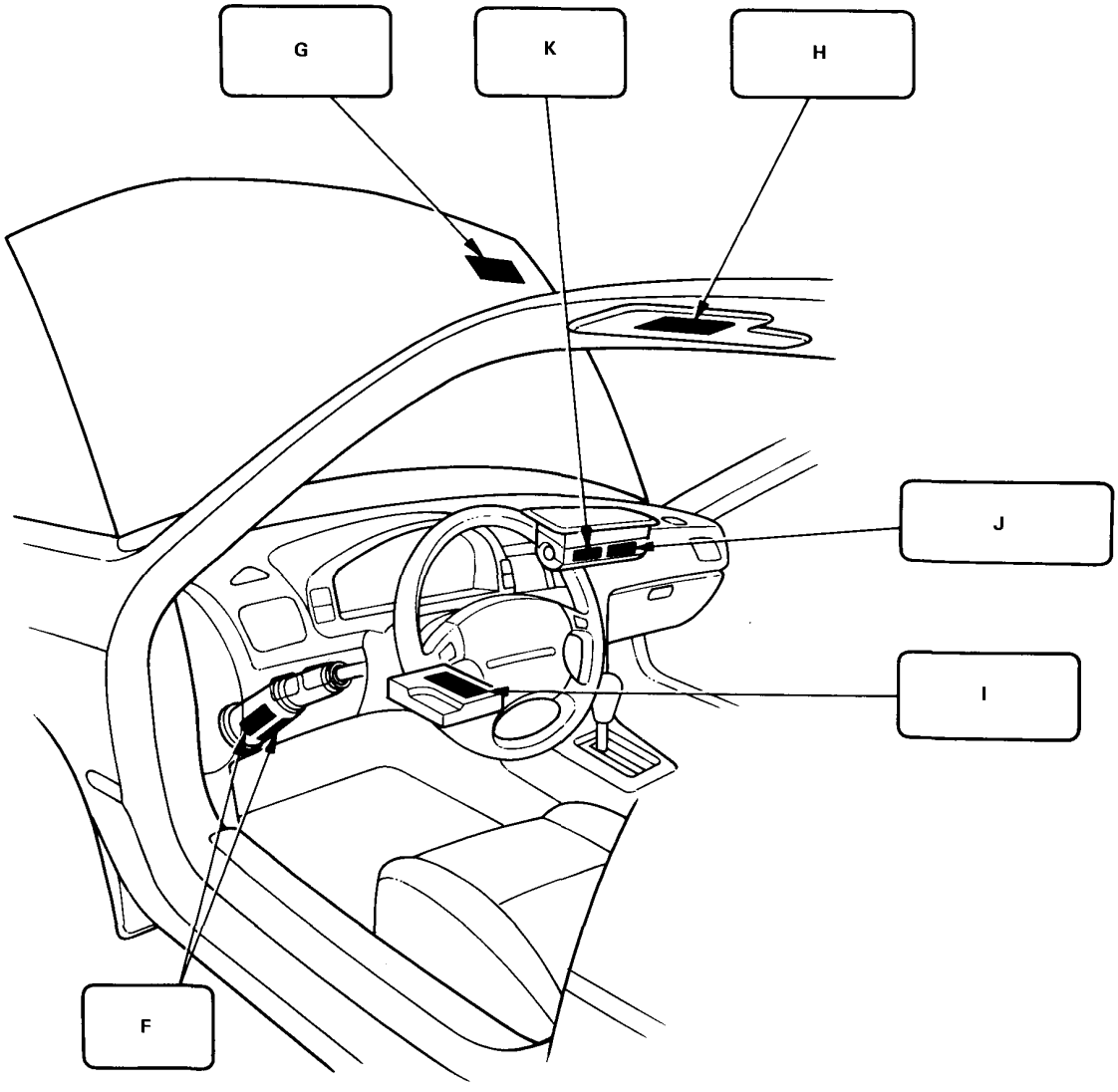

(cont'd)

SRS Airbag System Type III (cont'd)

G: SRS WARNING (HOOD)
Except KS model:

WARNING SRS
- THIS VEHICLE IS EQUIPPED WITH AN AIRBAG SYSTEM AS A SUPPLEMENTAL RESTRAINT SYSTEM. (SRS)
  ALL S.R.S. ELECTRICAL WIRING AND CONNECTORS ARE COLORED YELLOW.
  DO NOT USE ELECTRICAL TEST EQUIPMENT ON THESE CIRCUITS.
  TAMPERING WITH OR DISCONNECTING THE S.R.S. WIRING COULD RESULT IN ACCIDENTAL FIRING OF THE INFLATOR OR MAKE THE SYSTEM INOPERATIVE WHICH MAY RESULT IN SERIOUS INJURY.

ATTENTION SRS
- CE VEHICULE EST EQUIPE D'UN COUSSIN D'AIR DU COTE CONDUCTEUR QUI CONSTITUE UN SYSTEME DE RETEUNUE COMPLEMENTAIRE (S.R.S.).
  TOUS LES FILS ET CONNECTEURS ELECTRIQUES DU SYSTEME DE RETENUE COMPLEMENTAIRE (S.R.S.) SONT DE COULEUR JANUE. N'UTILISEZ PAS UN EQUIPEMENT D'ESSAIS ELECTRIQUES SUR CES CIRCUITS. NE TOUCHEZ PAS ET NE DEBRANCHEZ PAS LES FILS DU SYSTEME S.R.S. CAR CECI POURRAIT DE TRADUIRE PAR LE DECLENCHEMENT ACCIDENTEL DU GONFLEUR OU RENDRE LE SYSTEME INOPERANT ET VOUS EXPOSER AINSI A DE GRAVES BLESSURES.

WARNUNG SRS
- DIESES FAHRZEUG IST MIT EINEM FAHRER-AIRBAG (SRS) ALS ZUSÄTZLICHEM RÜCKHALTESYSTEM AUSGERÜSTET.
  ALLE ELEKTRISCHEN KABEL, SOWIE DIE ZUGEHÖRIGEN STECKVERBINDER DES S.R.S.-SYSTEMS SIND IN GELBER FARBE AUSGEFÜHRT.
  KEINE ELEKTRISCHEN PRÜFGERÄTE AN DIE S.R.S.-VERKABELUNG ANSCHLIEBEN.
  VERÄNDERN ODER UNTERBRECHEN DER S.R.S.-VERKABELUNG KANN UNKONTROLLIERTES ZÜNDEN DES GASGENERATORS AUSLÖSEN. ODER DAS SYSTEM AUBER FUNKTION SETZEN. WAS ZU ERNSTHAFTEN VERLETZUNGEN FÜHREN KANN.

WAARSCHUWING SRS
- DIT VOERTUIG IS UITGERUST MET EEN LUCHTKUSSEN AAN DE BESTUURDERSKANT ALS EXTRA BESCHERMING (S.R.S.).
  ALLE ELEKTRISCHE LEIDINGEN EN AANSLUITINGEN VAN DE S.R.S. ZIJN GEEL GEKLEURD. GEBRUIK GEEN ELEKTRISCHE TESTAPPARATUUR VOOR DEZE CIRCUITS.
  KNOEIEN MET OF LOSKOPPELEN VAN DE S.R.S. LEIDINGEN KAN LEIDEN TOT BRAND IN DE VULINRICHTING OF TOT UITSCHAKELEN VAN HET SYSTEEM: DIT KAN TOT ERNSTIGE ONGELUKKEN LEIDEN.

Label G location: Refer to page 1-9.

KS model:

WARNING SRS
- THIS VEHICLE IS EQUIPPED WITH AN AIRBAG SYSTEM AS A SUPPLEMENTAL RESTRAINT SYSTEM. (SRS)
  ALL S.R.S. ELECTRICAL WIRING AND CONNECTORS ARE COLORED YELLOW.
  DO NOT USE ELECTRICAL TEST EQUIPMENT ON THESE CIRCUITS.
  TAMPERING WITH OR DISCONNECTING THE S.R.S. WIRING COULD RESULT IN ACCIDENTAL FIRING OF THE INFLATOR OR MAKE THE SYSTEM INOPERATIVE, WHICH MAY RESULT IN SERIOUS INJURY.

VARNING SRS
- DETTA FORDON HAR EN LUFTKUDDE FÖR FÖRARSÄTET SOM ETT KOMPLETTERANDE SKYDDSSYSTEM (SRS). SAMTLIGA ELLEDNINGAR OCH KONTAKTER I SRS-SYSTEMET ÄR GULFÄRGADE.
  ANVÄND INTE ELEKTRISK PROVUTRUSTNING FÖR DESSA KRETSAR. OM DU ÄNDRAR ELLER LOSSAR EN SRS-LEDNING KAN DET RESULTERAIEN OAVSIKTLIG UTLÖSNING AV TRYCKPUMPEN ELLER GÖRA ATT SYSTEMET SLUTAR FUNGERA. DÅ KAN EN ALLVARLIG OLYCKA UPPSTÅ.

VAROITUS SRS
- TÄSSÄ AUTOSSA ON YLIMÄÄRÄISENÄ TUKIJÄRJESTELMÄNÄ AJAJAN ILMATYYNY. (SRS)
  KAIKKI SRS-SÄHKÖJOHDOT JA -LITTIMET OVAT KELTAISET.
  ÄLÄ KÄYTÄ SÄHKÖKOELAITTEITA NÄISSÄ VIRTAPIIREISAA. SRS-JOHTOJEN TUKKEAMINEN TAI IRROTTAMINEN SAATTAA SYTYTTÄÄ VAHINGOSSA PUMPUN TAI TEHDÄ JÄRJESTELMÄN KÄYTTÖKELVOTTOMAKSI.
  TÄSTÄ-TAAS SAATTAA AIHEUTUA VAKAVIA VAURIOITA.

H: DRIVER INFORMATION (SUNVISOR)

KG model:

SRS ALWAYS WEAR YOUR SEAT BELT
- THIS CAR IS EQUIPPED WITH A DRIVER AIRBAG AND A FRONT SEAT PASSENGER AIRBAG AS A SUPPLEMENTAL RESTRAINT SYSTEM (S.R.S.).
- IT IS DESIGNED TO SUPPLEMENT THE SEAT BELT.
- IF YOUR SRS INDICATOR LIGHTS WHILE DRIVING SEE YOUR AUTHORIZED HONDA DEALER.

SRS ATTACHEZ TOUJOURS VOTRE CEITURE
- CE VEHICULE EST EQUIPE D'UN SAC GONFLABLE POUR LA SECURITE DU CONDUCTEUR. ET D'UN SAC GONFLABLE POUR LA SECURITE DU PASSAGER AVANT, QUI CONSTITUENT UN SYSTEME DE RETENUE COMPLEMENTAIRE (S.R.S.).
- CE COUSSIN D'AIR VIENT EN COMPLEMENT DE LA CEINTURE DE SECURITE.
- SI LE TEMOIN SRS S'ALLUME PENDANT LA CONDUITE, ADRESSEZ-VOUS A VOTRE CONCESSIONNAIRE.

SRS SICHERHEITSGURTE BEI JEDER FAHRT ANLEGEN
- DIESES FAHRZEUG BESITZT JE EINEN AIRBAG FÜR FAHRER UND BEIFAHRER ALS ZUSÄTZLICHES RÜCKHALTESYSTEM (S.R.S.).
- DAS RÜCKHALTESYSTEM IST EINE ERGÄNZUNG ZUM SICHERHEITSGURT.
- SOLLTE WÄHREND DER FAHRT DIE SRS-KONTROLLEUCHTE AUFLEUCHTEN SUCHEN SIE BITTE UNGEHEND EINEN HONDA-HÄNDLER AUF.

SRS DRAAG ALTIJD UW VEILIGHEIDSGORDEL
- DIT VOERTUIG IS UITGERUST MET EENLUCHTKUSSEN AAN DE BESTUURDERSZIJDE EN PASSAGIERSZIJDE ALS TOEGEVOEGD VEILIGHEIDSSYSTEEM (S.R.S.).
- ONTWORPEN ALS EXTRA BESCHERMING NAAST DE VEILIGHEIDSGORDELS.
- ALES HET SRS-WAARSCHUWINGSLAMPJE GAAT BRANDEN ONDER HET RIJDEN, NEEM DAN KONTAKT OP MET UW HONDA DEALER.

Label H location: Refer to page 1-9.

KE model:

SRS ALWAYS WEAR YOUR SEAT BELT
- THIS CAR IS EQUIPPED WITH A DRIVER AIRBAG AND A FRONT SEAT PASSENGER AIRBAG AS A SUPPLEMENTAL RESTRAINT SYSTEM (S.R.S.).
- IT IS DESIGNED TO SUPPLEMENT THE SEAT BELT.
- IF YOUR SRS INDICATOR LIGHTS WHILE DRIVING SEE YOUR AUTHORIZED HONDA DEALER.

KS model:

SRS ALWAYS WEAR YOUR SEAT BELT
- THIS CAR IS EQUIPPED WITH A DRIVER AIRBAG AND A FRONT SEAT PASSENGER AIRBAG AS A SUPPLEMENTAL RESTRAINT SYSTEM (S.R.S.).
- IT IS DESIGNED TO SUPPLEMENT THE SEAT BELT.
- IF YOUR SRS INDICATOR LIGHTS WHILE DRIVING SEE YOUR AUTHORIZED HONDA DEALER.

SRS ANVÄND ALLTID BILBÄLTET
- DETTA FORDON ÄR FÖRSETT MED LUFTKUDDE PÄ BÄDE FÖRARE-OCH PASSAGERARESÄTENA FRAM SOM ETT KOMLETTERANDE SKYDDSSYSTEM (S.R.S.).
- DET ÄR ÄMNAT ATT KOMPLETTERA BILBÄLTET.
- OM SRS-INDIKATORN TÄNDS UNDER KÖRNING SKALL DU KONTAKTA EN AUKTORISERAD HONDA-ÅTERFÖRSÄLJARE.

SRS KÄYTÄ AINA TURVAVÖITÄ
- TÄMÄ AUTO ON VARUSTETTU AJAJAN ILMATYYNYLLÄ JA ETUMATKUSTAJAN ILMATYYNYLLÄ, JOTKA TOIMIVAT LISÄSUOJAJÄRJESTELMÄNÄ (S.R.S.).
- SE ON SUUNNITELTU TÄYDENTÄMÄÄN TURVAVYÖTÄ.
- JOS SRS-MERKKIVALO SYTTYY AJON AIKANA, OTTAKAA YHTEYS VALTUUTETTUUN HONDA-HUOLTOON.

(cont'd)

SRS Airbag System Type III (cont'd)

I: MONITOR NOTICE

NOTICE SRS
- NO SERVICEABLE PARTS INSIDE
- REFER TO SERVICE (SHOP) MANUAL FOR DETAILED INSTRUCTIONS.

お願い
- 分解しないで下さい。
- 取扱い、保管はサービスマニュアルを参照してください。

REMARQUE
- AUCUNE PIECE REPARABLE A L'INTERIEUR.
- POUR LES INSTRUCTIONS DETAILL'EES, SE REPORTER AU MANUEL DE REPARATIONS.

LET UP!
- GEEN ONDERDELEN BINNEN DEZE UNIT WAARAAN WERKZAAMHEDEN KUNNEN WORDEN VERRICHT.
- RAADPLEEG HET WERKPLAATSHANDBOEK VOOR NADERE AANWIJZINGEN.

ACHTUNG
- DIE INNENTEILE BEDÜRFEN KEINER WARTUNG.
- AUSFÜHRLICHE ANWEISUNGEN SIND DEM WERKSTATTHANDBUCH ZU ENTNEHMEN.

J: BAM INFLATOR LABEL (FRONT SEAT PASSENGER)

AIRBAG-GASGENERATOR UT 11873
MORTON INTERNATIONAL, INC. OGDEN, USA
HERSTELLUNG: (JAHR)
EINFÜHRER: HONDA DEUTSCHLAND
GMBH 6050 OFFENBACH
BAM PT_1-0437

DER GASGENERATOR DARF NUR FÜR INSASSENRÜCKHALTESYSTEME MIT LUFTSACK IN KRAFTFAHRZEUGE MONTIERT WERDEN.
DIE MONTAGE UND DEMONTAGE DES GASGENERATORS DARF NUR VON DAFÜR GESCHULTEM PERSONAL VORGENOMMEN WERDEN.

CAUTION CONTAINS FLAMMABLE SOLIDS	THE GAS GENERATOR SHOULD ONLY BE INSTALLED IN VEHICLES EQUIPPED WITH THE AIRBAG SYSTEM. THE GAS GENERATOR IS TO BE INSTALLED AND/OR DISASSEMBLED ONLY BY TRAINED PERSONNEL.
ATTENTION CONTENT DE SOLIDES FLAMMABLES	LE GENERATEUR DE GAZ NE PEUT ETRE INSTALLE QUE SUR DES VEHICULES EQUIPES D'UN SYSTEME AIRBAG. LE MONTAGE ET LE DEMONTAGE DU GENERATEUR DE GAZ NE PEUT ETRE EFFECTUE QUE PAR UN PERSONNEL QUALIFIE.

Label I, J and K locations: Refer to page 1-9.

K: FRONT SEAT PASSENGER MODULE DANGER

SRS
- DANGER
  EXPLOSIVE/FLAMMABLE
  POISON
- WARNING
  REFER TO SHOP MANUAL.
- DANGER
  EXPLOSIF ET INFLAMMABLE
  POISON
- ATTENTION
  SE REPORTER AU MANUEL D'ATELIER.
- GEFAHR
  EXPLOSIV/ENTZUNDBAR
  GIFT
- WARNUNG
  WERKSTATTHANDBUCH LESEN.
- GEVAAR
  EXPLOSIEGEVAAR/BRANDBAAR
  GIFTIG
- WAARSCHUWING
  LEES HET WERKPLAATSHANDBOEK.

Except SRS Airbag System

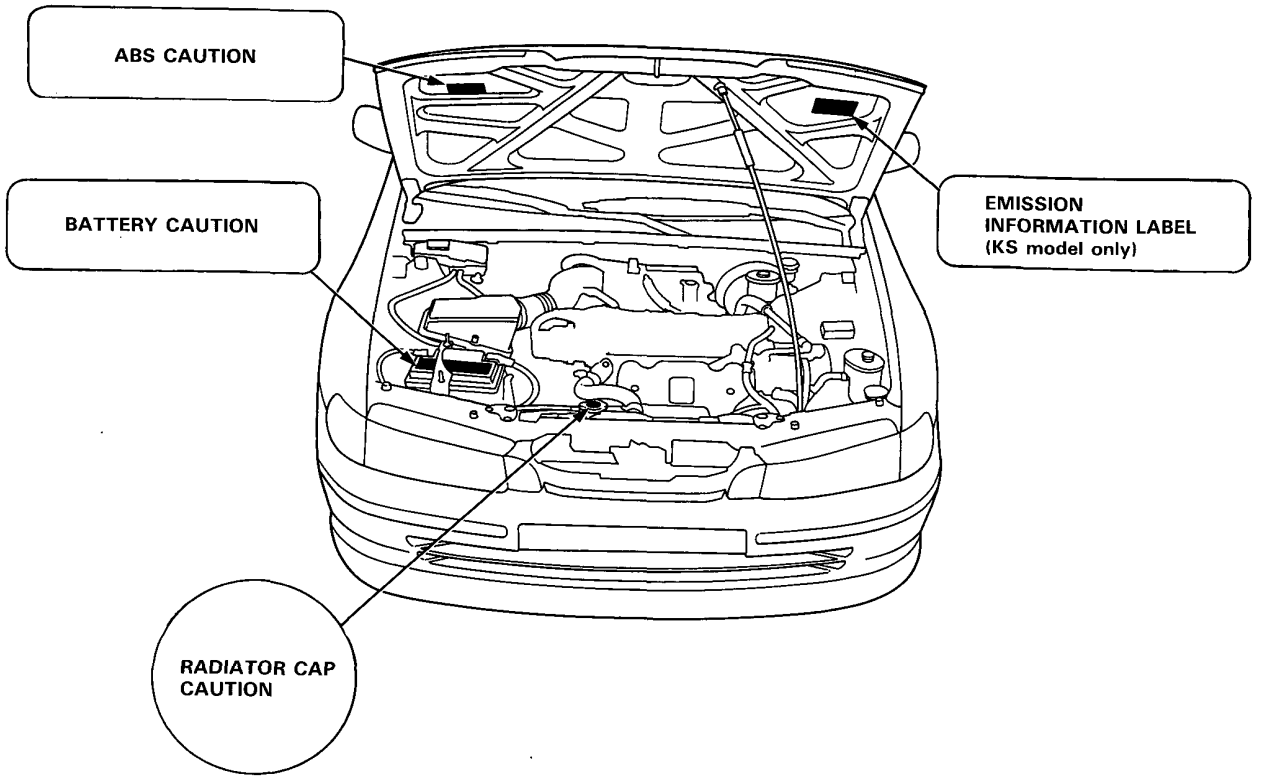

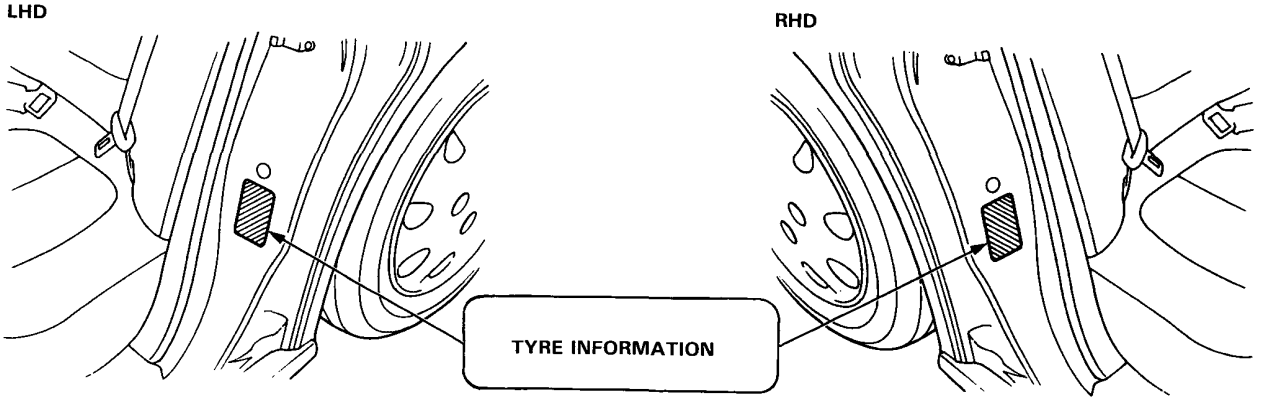

Abbreviations

List of automotive abbreviations which may be used in shop manual.

A/C	Air Conditioning, Air Conditioner
ALT	Alternator
ABS	Anti-lock Brake System
A/T	Automatic Transmission
ATF	Automatic Transmission Fluid
A/F	Air Fuel Ratio
AMP	Ampere (s)
ANT	Antenna
ASSY	Assembly
AUX	Auxiliary
APPROX.	Approximately
ATDC	After Top Dead Center
AUTO	Automatic
ATT	Attachment
ACL	Air Cleaner
API	American Petroleum Institute
BARO	Barometric
BAT	Battery
BTDC	Before Top Dead Center
BDC	Bottom Dead Center
CKP	Crankshaft Position
CYP	Cylinder Position
CAT or CATA	Catalytic Converter
CO	Carbon Monoxide
CYL	Cylinder
CPC	Clutch Pressure Control
CARB	Carburetor
COMP	Complete
CPU	Central Processing Unit
CHG	Charge
DI	Distributor Ignition
DLC	Data Link Connector
DTC	Diagnostic Trouble Code
DIFF	Differential
DOHC	Double Overhead Camshaft
DPI	Dual Point Injection
EVAP	Evaporative
EGR	Exhaust Gas Recirculation
ECM	Engine Control Module
ECT	Engine Coolant Temperature
EX	Exhaust
ELD	Electrical Load Detector
EFI	Electronic Fuel Injection
EPS	Electrical Power Steering
F	Front
FP	Fuel Pump
FWD	Front Wheel Drive
FR	Front Right
FL	Front Left
FSR	Fail Safe Relay
FIA	Fuel Injection Air
GAL	Gallon
GND	Ground
H/B	Hatchback
HO2S	Heated Oxygen Sensor
HC	Hydrocarbons
IAB	Intake Air Bypass
IAC	Idle Air Control
IAR	Intake Air Resonator
ICM	Ignition Control Module
IAT	Intake Air Temperature
IMA	Idle Mixture Adjustment
IN	Intake
IG or IGN	Ignition
ID	Identification
ID or I.D.	Inside Diameter
INJ	Injection
INT	Intermittent
KS	Knock Sensor
L	Left
LH	Left Handle
LHD	Left Handle Drive
L/C	Lock-up Clutch
LSD	Limited Slip Differential
LF	Left Front
LR	Left Rear
L-4	In-line Four Cylinder (engine)
LED	Light Emitting Diode

M/S	Manual Steering
MAP	Manifold Absolute Pressure
MIL	Malfunction Indicator Light
M/T	Manual Transmission
MCK	Motor Check
MAX.	Maximum
MIN.	Minimum
MPI	Multi Point Injection
N	Neutral
NOx	Nitrogen, Oxides of
O2S	Oxygen Sensor
OBD	On-board Diagnostic
OD or O.D.	Outside Diameter
P	Park
PAIR	Pulsed Secondary Air Injection
PSP	Power Steering Pressure
PCV	Positive Crankcase Ventilation
	Proportioning Control Valve
P/S	Power Steering
PGM-FI	Programmed-fuel Injection
PGM-IG	Programmed Ignition
PRI	Primary
P/N	Part Number
PL	Pilot Light
PMR	Pump Motor Relay
PSW	Pressure Switch
PSF	Power Steering Fluid
Qty	Quantity
R	Right
RR	Rear Right
RHD	Right Handle Drive
REF	Reference
RL	Rear Left
RON	Research Octane Number
SAE	Society of Automotive Engineers
SOHC	Single Overhead Camshaft
SOL	Solenoid
SPEC	Specification
S/R	Sun Roof
SRS	Supplemental Restraint System
STD	Standard
SW	Switch
SCS	Service Check Signal
SEC	Second
	Secondary
T	Torque
TCM	Transmission Control Module
TWC	Three Way Catalytic Converter
TDC	Top Dead Center
TB	Throttle Body
TP	Throttle Position
TC	Torque Converter
T/B	Timing Belt
T/N	Tool Number
TCS	Traction Control System
VSS	Vehicle Speed Sensór
VTEC	Viriable Valve Timing & Valve Lift
	Electronic Control
VC	Viscous Coupling
VIN	Vehicle Identification Number
VVIS	Variable Volume Intake System
W	With
W/O	Without
WOT	Wide Open Throttle
2WD	Two Wheel Drive
4WD	Four Wheel Drive
2WS	Two Wheel Steering
4WS	Four Wheel Steering
4AT	4-speed Automatic Transmission
5MT	5-speed Manual Transmission
P	Park
R	Reverse
N	Neutral
D_4	Drive (1st through 4th gear)
D_3	Drive (1st through 3rd gear)
2	Second
1	First
1ST	Low (gear)
2ND	Second (gear)
3RD	Third (gear)
4TH	Fourth (gear)
5TH	Fifth (gear)

Special Tools

Individual tool lists are located at the front of each section.

Specifications

Standards and Service Limits 3-2
Design Specifications 3-15
Body Specifications 3-18

Standards and Service Limits

Cylinder Head/Valve Train (F20Z1, F20Z2 engines) — Section 6

	MEASUREMENT			STANDARD (NEW)	SERVICE LIMIT
Compression	250 min^{-1} (rpm) and wide open throttle kPa (kg/cm^2, psi)		Nominal	1,250 (12.5, 178)	
			Minimum	950 (9.5, 135)	
			Maximum variation	200 (2.0, 28)	
Cylinder head	Warpage			—	0.05 (0.002)
	Height			99.95 – 100.05 (3.935 – 3.939)	—
Camshaft	End play			0.05 – 0.15 (0.002 – 0.006)	0.5 (0.02)
	Camshaft-to-holder oil clearance			0.050 – 0.089 (0.0020 – 0.0035)	0.15 (0.006)
	Total runout			0.03 (0.001) max.	0.04 (0.002)
	Cam lobe height	F20Z1 engine	IN	38.741 (1.5252)	—
			EX	38.972 (1.5343)	—
		F20Z2 engine	IN	38.095 (1.4998)	—
			EX	37.890 (1.4917)	—
Valve	Valve clearance		IN	0.24 – 0.28 (0.009 – 0.011)	—
			EX	0.28 – 0.32 (0.011 – 0.013)	—
	Valve stem O.D.		IN	5.485 – 5.495 (0.2159 – 0.2163)	5.455 (0.2148)
			EX	5.450 – 5.460 (0.2146 – 0.2150)	5.420 (0.2134)
	Stem-to-guide clearance		IN	0.020 – 0.045 (0.0008 – 0.0018)	0.08 (0.003)
			EX	0.055 – 0.080 (0.0022 – 0.0031)	0.12 (0.005)
Valve seat	Width		IN	1.25 – 1.55 (0.049 – 0.061)	2.0 (0.08)
			EX	1.25 – 1.55 (0.049 – 0.061)	2.0 (0.08)
	Stem installed height		IN	48.245 – 48.715 (1.8994 – 1.9179)	48.915 (1.9248)
			EX	50.315 – 50.785 (1.9809 – 1.9994)	51.035 (2.0092)
Valve spring	Free length	F20Z1 engine	IN	53.16 (2.093) *1	—
				53.15 (2.093) *2	—
				53.42 (2.103) *3	—
			EX	55.80 (2.197) *1	—
				55.78 (2.196) *2	—
				54.66 (2.152) *3	—
		F20Z2 engine	IN	54.55 (2.148) *1	—
				54.54 (2.147) *2	—
				53.42 (2.103) *3	—
			EX	59.88 (2.367) *1, *2	—
				54.66 (2.152) *3	—
Valve guide	I.D.		IN	5.515 – 5.530 (0.2171 – 0.2177)	5.53 (0.218)
			EX	5.515 – 5.530 (0.2171 – 0.2177)	5.53 (0.218)
	Installed height		IN	23.75 – 24.25 (0.935 – 0.955)	—
			EX	15.05 – 15.55 (0.593 – 0.612)	—
Rocker arm	Arm-to-shaft clearance		IN	0.017 – 0.050 (0.0007 – 0.0020)	0.08 (0.003)
			EX	0.018 – 0.054 (0.0007 – 0.0021)	0.08 (0.003)

*1: CHUO HATSUJO manufactured valve spring.
*2: NIHON HATSUJO manufactured valve spring.
*3: SCHERDEL manufactured valve spring.

Engine Block (F20Z1, F20Z2 engines) — Section 7

Unit of length: mm (in)

	MEASUREMENT		STANDARD (NEW)	SERVICE LIMIT
Cylinder block	Warpage of deck surface		0.07 (0.003) max.	0.10 (0.004)
	Bore diameter	A or I	85.010 – 85.020 (3.3468 – 3.3472)	85.070 (3.3492)
		B or II	85.000 – 85.010 (3.3465 – 3.3468)	85.070 (3.3492)
	Bore taper		—	0.05 (0.002)
	Reboring limit		—	0.5 (0.02)
Piston	Skirt O.D. (at 21 mm (0.8 in) from bottom of skirt)	No Letter	84.980 – 84.990 (3.3457 – 3.3461)	84.970 (3.3453)
		Letter B	84.970 – 84.980 (3.3453 – 3.3457)	84.960 (3.3449)
	Clearance in cylinder		0.020 – 0.040 (0.0008 – 0.0016)	0.05 (0.002)
	Groove width (for ring)	Top	1.220 – 1.230 (0.0480 – 0.0484)	1.25 (0.049)
		Second	1.220 – 1.230 (0.0480 – 0.0484)	1.25 (0.049)
		Oil	2.805 – 2.825 (0.1104 – 0.1112)	2.85 (0.112)
Piston ring	Ring-to-groove clearance	Top	0.035 – 0.060 (0.0014 – 0.0024)	0.13 (0.005)
		Second	0.030 – 0.055 (0.0012 – 0.0022)	0.13 (0.005)
	Ring end gap	Top	0.20 – 0.35 (0.008 – 0.014)	0.60 (0.024)
		Second	0.40 – 0.55 (0.016 – 0.022)	0.70 (0.028)
		Oil	0.20 – 0.70 (0.008 – 0.028)	0.80 (0.031)
Piston Pin	O.D.		21.994 – 22.000 (0.8659 – 0.8661)	—
	Pin-to-piston clearance		0.012 – 0.024 (0.0005 – 0.0009)	—
Connecting rod	Pin-to-rod interference		0.013 – 0.032 (0.0005 – 0.0013)	—
	Small end bore diameter		21.968 – 21.981 (0.8649 – 0.8654)	—
	Large end bore diameter	Nominal	48.0 (1.89)	—
	End play installed on crankshaft		0.15 – 0.30 (0.006 – 0.012)	0.40 (0.016)
Crankshaft	Main journal diameter	No. 2 journal	49.976 – 50.000 (1.9676 – 1.9685)	—
		No. 3 journal	49.972 – 49.996 (1.9674 – 1.9683)	—
		No. 1 and No. 4 journals	49.984 – 50.008 (1.9679 – 1.9688)	—
		No. 5 journal	49.988 – 50.012 (1.9680 – 1.9690)	—
	Rod journal diameter		44.976 – 45.000 (1.7707 – 1.7717)	—
	Taper		0.005 (0.0002) max.	0.006 (0.0004)
	Out-of-round		0.005 (0.0002) max.	0.006 (0.0004)
	End play		0.10 – 0.35 (0.004 – 0.014)	0.45 (0.018)
	Total runout		0.03 (0.001)	0.04 (0.002)
Bearings	Main bearing-to-journal oil clearance	No. 2 journal	0.021 – 0.045 (0.0008 – 0.0018)	0.050 (0.0020)
		No. 3 journal	0.025 – 0.049 (0.0010 – 0.0019)	0.055 (0.0022)
		No. 1 and No. 4 journals	0.013 – 0.037 (0.0005 – 0.0015)	0.050 (0.0020)
		No. 5 journal	0.009 – 0.033 (0.0004 – 0.0013)	0.040 (0.0016)
	Rod bearing-to-journal oil clearance		0.015 – 0.043 (0.0006 – 0.0017)	0.050 (0.0020)
Balancer shaft	Journal diameter	No. 1 front journal	42.722 – 42.734 (1.6820 – 1.6824)	42.71 (1.681)
		No. 1 rear journal	20.938 – 20.950 (0.8243 – 0.8248)	20.92 (0.824)
		No. 2 front and rear journals	38.712 – 38.724 (1.5241 – 1.5246)	38.70 (1.524)
		No. 3 front and rear journals	34.722 – 34.734 (1.3670 – 1.3675)	34.71 (1.367)
	Journal taper		0.005 (0.0002)	—
	End play	Front	0.10 – 0.35 (0.004 – 0.014)	—
		Rear	0.06 – 0.18 (0.002 – 0.007)	—
	Total runout		0.02 (0.001) max.	0.03 (0.001)
	Shaft-to-bearing oil clearance			
		No. 1 rear journal	0.050 – 0.075 (0.0020 – 0.0030)	0.09 (0.004)
		No. 1 front, No. 3 front and rear journals	0.066 – 0.098 (0.0026 – 0.0039)	0.12 (0.005)
		No. 2 front and rear journals	0.076 – 0.108 (0.0030 – 0.0043)	0.13 (0.005)
Balancer shaft bearing	I.D.	No. 1 front journal	42.800 – 42.820 (1.6850 – 1.6858)	42.83 (1.686)
		No. 1 rear journal	21.000 – 21.013 (0.8268 – 0.8273)	21.02 (0.828)
		No. 2 front and rear journals	38.800 – 38.820 (1.5276 – 1.5283)	38.83 (1.529)
		No. 3 front and rear journals	34.800 – 34.820 (1.3701 – 1.3709)	34.83 (1.371)

Standards and Service Limits

Cylinder Head/Valve Train (H23A3 engine) — Section 6

	MEASUREMENT		STANDARD (NEW)	SERVICE LIMIT
Compression	250 min^{-1} (rpm) and wide open throttle kPa (kg/cm², psi)	Nominal	1,250 (12.5, 178)	
		Minimum	950 (9.5, 135)	
		Maximum variation	200 (2.0, 28)	
Cylinder head	Warpage		—	0.05 (0.002)
	Height		131.95 – 132.05 (5.195 – 5.199)	—
Camshaft	End play		0.05 – 0.15 (0.002 – 0.006)	0.5 (0.02)
	Camshaft-to-holder oil clearance		0.050 – 0.089 (0.0020 – 0.0035) *1	0.15 (0.006)*1
			0.100 – 0.139 (0.0039 – 0.0055) *2	0.20 (0.008)*2
	Total runout		0.03 (0.001) max.	0.04 (0.002)
	Cam lobe height	IN	33.661 (1.3252)	—
		EX	33.725 (1.3278)	—
Valve	Valve clearance	IN	0.07 – 0.11 (0.003 – 0.004) *3	—
		EX	0.15 – 0.19 (0.006 – 0.007) *3	—
	Valve stem O.D.	IN	6.580 – 6.590 (0.2591 – 0.2594)	6.55 (0.258)
		EX	6.550 – 6.560 (0.2579 – 0.2583)	6.52 (0.257)
	Stem-to-guide clearance	IN	0.02 – 0.05 (0.001 – 0.002)	0.08 (0.003)
		EX	0.05 – 0.08 (0.002 – 0.003)	0.11 (0.004)
Valve seat	Width	IN	1.25 – 1.55 (0.049 – 0.061)	2.0 (0.08)
		EX	1.25 – 1.55 (0.049 – 0.061)	2.0 (0.08)
	Stem installed height	IN	39.365 – 39.835 (1.5498 – 1.5683)	40.085 (1.5781)
		EX	39.165 – 39.635 (1.5419 – 1.5604)	39.885 (1.5703)
Valve spring	Free length (Reference)	IN	47.14 (1.856)	—
		EX	47.14 (1.856)	—
Valve guide	I.D.	IN	6.61 – 6.63 (0.260 – 0.261)	6.70 (0.264)
		EX	6.61 – 6.63 (0.260 – 0.261)	6.70 (0.264)
	Installed height	IN	13.25 – 13.75 (0.522 – 0.541)	—
		EX	13.75 – 14.25 (0.541 – 0.561)	—

*1: Except exhaust No. 5 jounal.
*2: Exhaust No. 5 journal.
*3: Measured between the camshaft and rocker arm.

Unit of length: mm (in)

Engine Block (H23A3 engine) — Section 7

	MEASUREMENT		STANDARD (NEW)	SERVICE LIMIT
Cylinder block	Warpage of deck surface		0.07 (0.003) max.	0.10 (0.004)
	Bore diameter	A	87.010 – 87.020 (3.4256 – 3.4260)	87.070 (3.4279)
		B	87.000 – 87.010 (3.4252 – 3.4256)	87.070 (3.4279)
	Bore taper		—	0.05 (0.002)
	Reboring limit		—	0.25 (0.010)
Piston	Skirt O.D. (at 15 mm (0.6 in) from bottom of skirt)	No Letter	86.990 – 87.003 (3.4248 – 3.4253)	86.980 (3.4244)
		Letter B	86.980 – 86.993 (3.4244 – 3.4249)	86.970 (3.4240)
	Clearance in cylinder		0.007 – 0.030 (0.0003 – 0.0012)	0.04 (0.002)
	Groove width (for ring)	Top	1.230 – 1.245 (0.0484 – 0.0490)	1.265 (0.0498)
		Second	1.230 – 1.245 (0.0484 – 0.0490)	1.265 (0.0498)
		Oil	2.805 – 2.825 (0.1104 – 0.1110)	2.85 (0.112)
Piston ring	Ring-to-groove clearance	Top	0.045 – 0.075 (0.0018 – 0.0030)	0.13 (0.005)
		Second	0.040 – 0.070 (0.0016 – 0.0028)	0.13 (0.005)
	Ring end gap	Top	0.25 – 0.35 (0.010 – 0.014)	0.60 (0.024)
		Second	0.60 – 0.75 (0.024 – 0.030)	0.90 (0.035)
		Oil	0.20 – 0.50 (0.008 ÷ 0.020) *1	0.60 (0.024) *1
			0.20 – 0.70 (0.008 – 0.028) *2	0.80 (0.031) *2
Piston Pin	O.D.		21.994 – 22.000 (0.8659 – 0.8661)	—
	Pin-to-piston clearance		0.012 – 0.026 (0.0005 – 0.0010)	—
Connecting rod	Pin-to-rod interference		0.013 – 0.032 (0.0005 – 0.0013)	—
	Small end bore diameter		21.968 – 21.981 (0.8649 – 0.8654)	—
	Large end bore diameter	Nominal	51.00 (2.008)	—
	End play installed on crankshaft		0.15 – 0.30 (0.006 – 0.012)	0.40 (0.016)
Crankshaft	Main journal diameter	No. 2 journal	49.976 – 50.000 (1.9676 – 1.9685)	—
		No. 3 journal	49.972 – 49.996 (1.9674 – 1.9683)	—
		No. 1 and No. 4 journals	49.984 – 50.008 (1.9679 – 1.9688)	—
		No. 5 journal	49.988 – 50.012 (1.9680 – 1.9690)	—
	Rod journal diameter		47.976 – 48.000 (1.8888 – 1.8898)	—
	Taper		0.005 (0.0002) max.	0.006 (0.0004)
	Out-of-round		0.005 (0.0002) max.	0.006 (0.0004)
	End play		0.10 – 0.35 (0.004 – 0.014)	0.45 (0.018)
	Total runout		0.03 (0.001) max.	0.04 (0.002)
Bearings	Main bearing-to-journal oil clearance	No. 2 journal	0.021 – 0.045 (0.0008 – 0.0018)	0.050 (0.0020)
		No. 3 journal	0.025 – 0.049 (0.0010 – 0.0019)	0.055 (0.0022)
		No. 1 and No. 4 journals	0.013 – 0.037 (0.0005 – 0.0015)	0.050 (0.0020)
		No. 5 journal	0.009 – 0.033 (0.0004 – 0.0013)	0.040 (0.0016)
	Rod bearing-to-journal oil clearance		0.021 – 0.049 (0.0008 – 0.0019)	0.055 (0.0022)
Balancer shaft	Journal diameter	No. 1 front journal	42.722 – 42.734 (1.6820 – 1.6824)	42.71 (1.681)
		No. 1 rear journal	20.938 – 20.950 (0.8243 – 0.8248)	20.92 (0.824)
		No. 2 front and rear journals	38.712 – 38.724 (1.5241 – 1.5246)	38.70 (1.524)
		No. 3 front and rear journals	34.722 – 34.734 (1.3670 – 1.3675)	34.71 (1.367)
	Journal taper		0.005 (0.0002)	—
	End play	Front	0.10 – 0.35 (0.004 – 0.014)	—
		Rear	0.06 – 0.18 (0.002 – 0.007)	—
	Total runout		0.02 (0.001) max.	0.03 (0.001)
	Shaft-to-bearing oil clearance			
	No. 1 rear journal		0.050 – 0.075 (0.0020 – 0.0030)	0.09 (0.004)
	No. 1 front, No. 3 front and rear journals		0.066 – 0.098 (0.0026 – 0.0039)	0.12 (0.005)
	No. 2 front and rear journals		0.076 – 0.108 (0.0030 – 0.0043)	0.13 (0.005)
Balancer shaft bearing	I.D.	No. 1 front journal	42.800 – 42.820 (1.6850 – 1.6858)	42.83 (1.686)
		No. 1 rear journal	21.000 – 21.013 (0.8268 – 0.8273)	21.02 (0.828)
		No. 2 front and rear journals	38.800 – 38.820 (1.5276 – 1.5283)	38.83 (1.529)
		No. 3 front and rear journals	34.800 – 34.820 (1.3701 – 1.3709)	34.83 (1.371)

*1: TEIKOKU PISTON RING manufactured piston ring.
*2: RIKEN manufactured piston ring.

Standards and Service Limits

Engine Lubrication — Section 8

	MEASUREMENT		STANDARD (NEW)	SERVICE LIMIT
Engine oil	Capacity ℓ (US qt, Imp qt)	F20Z1, F20Z2 engines	4.9 (5.2, 4.3) for engine overhaul 3.8 (4.0, 3.3) for oil change, including filter 3.5 (3.7, 3.1) for oil change, without filter	
		H23A3 engine	5.4 (5.7, 6.1) for engine overhaul 4.3 (4.6, 3.8) for oil change, including filter 4.0 (4.2, 3.5) for oil change, without filter	
Oil pump	Inner-to-outer rotor clearance		0.02 – 0.16 (0.001 – 0.006)	0.20 (0.008)
	Pump housing-to-outer rotor clearance		0.10 – 0.19 (0.004 – 0.007)	0.21 (0.008)
	Pump housing-to-rotor axial clearance		0.02 – 0.07 (0.001 – 0.003)	0.12 (0.005)
Relief valve	Pressure setting at engine oil temp. 80°C (176°F) kPa (kg/cm², psi)	at idle	70 (0.7, 10) min.	
		at 3,000 min⁻¹ (rpm)	350 (3.5, 50) min.	

Cooling — Section 10

	MEASUREMENT		STANDARD (NEW)
Radiator	Coolant capacity ℓ (US qt, Imp qt) (including engine, heater, cooling line and reservoir)	F20Z1 engine	M/T: 6.3 (6.7, 5.5) for overhaul 2.7 (2.9, 2.4) for coolant change A/T: 6.2 (6.6, 5.5) for overhaul 2.6 (2.7, 2.3) for coolant change
		F20Z2 engine	M/T: 6.3 (6.7, 5.5) for overhaul 2.7 (2.9, 2.4) for coolant change
		H23A3 engine	M/T: 7.0 (7.4, 6.2) for overhaul 3.3 (3.5, 3.0) for coolant change A/T: 6.9 (7.3, 6.1) for overhaul 3.2 (3.4, 2.8) for coolant change
	Reservior capacity ℓ (US qt, Imp qt)		0.6 (0.63, 0.53)
Radiator cap	Opening pressure kPa (kg/cm², psi)		95 – 125 (0.95 – 1.25, 14 – 18)
Thermostat	Start to open °C (°F)		76 – 80 (169 – 176)
	Fully open °C (°F)		90 (194)
	Valve lift at fully open		8.0 (0.31) min.
Cooling fan	Thermoswitch "ON" temperature °C (°F)		90 – 96 (194 – 205)
	Thermoswitch "OFF" temperature °C (°F)		Subtract 2 – 7 (4 – 13) from actual "ON" temperature
	Fan timer "ON" temperature °C (°F)		103 – 109 (217 – 228)
	Fan timer "OFF" temperature °C (°F)		Subtract 2 – 5 (4 – 9) from actual "ON" temperature

Unit of length: mm (in)

Fuel and Emissions — Section 11

	MEASUREMENT	STANDARD (NEW)	SERVICE LIMIT
Fuel pump	Displacement in 10 seconds mℓ (US oz, Imp oz)	230 (7.8, 8.1)	110 (3.7, 3.9)
	Relief valve opening pressure kPa (kg/cm², psi)	450 – 600 (4.5 – 6.0, 64 – 85)	
Pressure regulator	Pressure with regulator vacuum hose disconnected kPa (kg/cm², psi)	280 – 330 (2.8 – 3.3, 40 – 47)	
Fuel tank	Capacity ℓ (US gal, Imp gal)	65 (17.2, 14.3)	
Engine	Fast idle speed min⁻¹ (rpm)	1,400 ± 200	
	Idle speed min⁻¹ (rpm) *(with headlights and cooling fan off)*	770 ± 50 (M/T: neutral) 770 ± 50 (A/T: N or P position)	
	Idle CO %	0.2 % max.	

Clutch — Section 12

	MEASUREMENT	STANDARD (NEW)	SERVICE LIMIT
Clutch pedal	Clutch pedal height to the floor	210 (8.27)	—
	Stroke at pedal	142 (5.8)	—
	Total clutch pedal free play	9 – 15 (0.4 – 0.6)	—
	Disengagement height to the floor	90 (3.5) min.	—
	to the carpet	80 (3.1) min.	—
Flywheel	Clutch surface runout	0.05 (0.002) max.	0.15 (0.006)
Clutch disc	Rivet head depth	1.4 (0.06) min.	0.2 (0.01)
	Surface runout	0.6 (0.02) max.	1.0 (0.04)
	Thickness	8.5 – 9.2 (0.33 – 0.36)	6.5 (0.26)
Pressure plate	Finger height	0.6 (0.02) max.	0.8 (0.03)
	Warpage	0.03 (0.001) max.	0.15 (0.006)

Manual Transmission — Section 13

	MEASUREMENT	STANDARD (NEW)	SERVICE LIMIT
Transmission oil	Capacity ℓ (US qt, Imp qt)	1.9 (2.0, 1.7) for oil change 2.0 (2.1, 1.8) for overhaul	
Mainshaft	End play	0.10 – 0.16 (0.004 – 0.006)	Adjust with a shim.
	Diameter of ball bearing contact area C	27.977 – 27.990 (1.1015 – 1.1020)	27.93 (1.100)
	Diameter of needle bearing contact area B	37.984 – 38.000 (1.4954 – 1.4961)	37.93 (1.493)
	Diameter of ball bearing contact area A	27.987 – 28.000 (1.1018 – 1.1024)	27.94 (1.100)
	Runout	0.02 (0.001) max.	0.05 (0.002)
Mainshaft 3rd and 4th gears	I.D.	43.009 – 43.025 (1.6933 – 1.6939)	43.080 (1.6961)
	End play	0.06 – 0.21 (0.002 – 0.008)	0.30 (0.012)
	Thickness 3rd gear	32.42 – 32.47 (1.276 – 1.278)	32.3 (1.27)
	4th gear	30.92 – 30.97 (1.217 – 1.219)	30.8 (1.21)
Mainshaft 5th gear	I.D.	43.009 – 43.025 (1.6933 – 1.6939)	43.080 (1.6961)
	End play	0.06 – 0.21 (0.002 – 0.008)	0.30 (0.012)
	Thickness	30.92 – 30.97 (1.217 – 1.219)	30.8 (1.21)
Countershaft	Diameter of needle bearing contact area A	38.000 – 38.015 (1.4961 – 1.4967)	37.95 (1.494)
	Diameter of ball bearing and needle bearing contact area C	24.987 – 25.000 (0.9837 – 0.9845)	24.94 (0.982)
	Diameter of 1st gear contact area B	39.984 – 40.000 (1.5742 – 1.5748)	39.93 (1.572)
	Runout	0.02 (0.001) max.	0.05 (0.002)
Countershaft 1st gear	I.D.	46.009 – 46.025 (1.8114 – 1.8120)	46.08 (1.814)
	End play	0.04 – 0.10 (0.002 – 0.004)	Adjust with a shim.
Countershaft 2nd gear	I.D.	47.009 – 47.025 (1.8507 – 1.8514)	47.08 (1.854)
	End play	0.04 – 0.10 (0.002 – 0.004)	Adjust with a collar.
	Thickness	28.92 – 28.97 (1.139 – 1.141)	28.8 (1.13)

(cont'd)

Standards and Service Limits

Manual Transmission — Section 13 (cont'd)

	MEASUREMENT	STANDARD (NEW)	SERVICE LIMIT
Spacer collar (Countershaft 2nd gear)	I.D.	36.48 – 36.49 (1.4362 – 1.4366)	36.50 (1.437)
	O.D.	41.989 – 42.000 (1.6531 – 1.6535)	41.94 (1.652)
	Length A (P/N 23917 – P21 – 010)	29.02 – 29.04 (1.1425 – 1.1433)	—
	Length B (P/N 23918 – P21 – 010)	29.07 – 29.09 (1.1445 – 1.1453)	—
Spacer collar (Mainshaft 4th and 5th gears)	I.D. 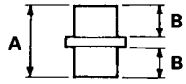	31.002 – 31.012 (1.2205 – 1.2209)	31.06 (1.223)
	O.D.	37.989 – 38.000 (1.4956 – 1.4961)	37.94 (1.494)
	Length A	56.45 – 56.55 (2.222 – 2.226)	—
	Length B	26.03 – 26.08 (1.025 – 1.027)	26.01 (1.024)
Reverse idler gear	I.D.	20.016 – 20.043 (0.7880 – 0.7891)	20.09 (0.7909)
	Gear-to-reverse gear shaft clearance	0.036 – 0.084 (0.0014 – 0.0033)	0.160 (0.0006)
Synchro ring	Ring-to-gear clearance (ring pushed against gear)	0.85 – 1.10 (0.033 – 0.043)	0.40 (0.016)
Double cone synchro	Clearance (ring pushed against gear)		
	Outer synchro ring-to-synchro cone	0.5 (0.02) min.	0.3 (0.01)
	Synchro ring-to-gear	0.5 (0.02) min.	0.3 (0.01)
	Outer synchro ring-to-gear	0.95 – 1.68 (0.037 – 0.066)	0.6 (0.02)
Shift fork	Finger thickness	6.2 – 6.4 (0.24 – 0.25)	—
	Fork-to-synchro sleeve clearance	0.35 – 0.65 (0.014 – 0.026)	1.0 (0.039)
Reverse shift fork	Pawl groove width	13.0 – 13.3 (0.51 – 0.52)	—
	Fork-to-reverse idler gear clearance	0.5 – 1.1 (0.02 – 0.04)	1.8 (0.07)
	Groove width*1 at A	7.05 – 7.25 (0.278 – 0.285)	—
	Groove width*1 at B	7.4 – 7.7 (0.29 – 0.30)	—
	Fork-to-5th/reverse shift shaft clearance*2 at A'	0.05 – 0.35 (0.002 – 0.014)	0.5 (0.02)
	Fork-to-5th/reverse shift shaft clearance*2 at B'	0.4 – 0.8 (0.02 – 0.03)	1.0 (0.04)
Shift arm	I.D.	15.973 – 16.000 (0.6289 – 0.6299)	—
	Shift arm-to-shaft clearance	0.005 – 0.059 (0.0002 – 0.0023)	—
	Shift fork diameter at contact area	12.9 – 13.0 (0.508 – 0.512)	—
	Shift-arm-to-shift fork shaft clearance	0.2 – 0.5 (0.008 – 0.019)	0.6 (0.024)
Select lever	Shaft outer diameter	15.941 – 15.968 (0.6276 – 0.6287)	—
	Shift arm cover clearance	0.032 – 0.102 (0.0013 – 0.0040)	—
Shift lever	O.D.	15.941 – 15.968 (0.6276 – 0.6287)	—
	Transmission housing clearance	0.021 – 0.041 (0.0008 – 0.0055)	—
Interlock	Bore diameter	16.00 – 16.05 (0.630 – 0.632)	—
	Shift arm clearance	0.032 – 0.109 (0.0013 – 0.0043)	—

*1: Measuring points

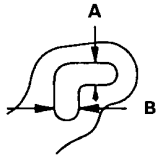

*2: Measuring points

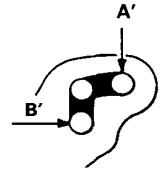

Automatic Transmission — Section 14

Unit of length: mm (in)

	MEASUREMENT	STANDARD (NEW)	SERVICE LIMIT
Transmission fluid	Capacity ℓ (US qt, Imp qt)	6.0 (6.4, 5.2) for overhaul 2.4 (2.6, 2.1) for fluid change	
Hydraulic pressure (F20Z1 engine) kPa (kg/cm², psi)	Line pressure at 2,000 min⁻¹ (rpm) (N or P position)	800 (8.0, 114) throttle fully-closed | 850 (8.5, 121) throttle more than 3/16 open	750 (7.5, 107) throttle more than 3/16 open
	4th clutch pressure at 2,000 min⁻¹ (rpm) (D4 position)	530 (5.3, 75) throttle fully-closed | 850 (8.5, 121) throttle more than 3/16 open	480 (4.8, 68) throttle fully-closed | 750 (7.5, 107) throttle more than 3/16 open
	3rd and 2nd clutch pressure at 2,000 min⁻¹ (rpm) (D4 position)	500 (5.0, 71) throttle fully-closed | 850 (8.5, 121) throttle more than 3/16 open	450 (4.5, 64) throttle fully-closed | 750 (7.5, 107) throttle more than 3/16 open
	2nd clutch pressure at 2,000 min⁻¹ (rpm) (2 position)	800 – 850 (8.0 – 8.5, 114 – 121)	750 (7.5, 107)
	1st and 1st-hold clutch pressure at 2,000 min⁻¹ (rpm) (1 position)	800 – 850 (8.0 – 8.5, 114 – 121)	750 (7.5, 107)
	Throttle B pressure — Throttle fully closed Throttle fully open	0 (0,0) 800 – 850 (8.0 – 8.5, 114 – 121)	— 750 (7.5, 107)
Hydraulic pressure (H23A3 engine) kPa (kg/cm², psi)	Line pressure at 2,000 min⁻¹ (rpm) (N or P position)	850 (8.5, 121) throttle fully-closed | 900 (9.0, 128) throttle more than 3/16 open	800 (8.0, 114) throttle more than 3/16 open
	4th clutch pressure at 2,000 min⁻¹ (rpm) (D4 position)	530 (5.3, 75) throttle fully-closed | 900 (9.0, 128) throttle more than 3/16 open	480 (4.8, 68) throttle fully-closed | 800 (8.0, 114) throttle more than 3/16 open
	3rd and 2nd clutch pressure at 2,000 min⁻¹ (rpm) (D4 position)	500 (5.0, 71) throttle fully-closed | 900 (9.0, 128) throttle more than 3/16 open	450 (4.5, 64) throttle fully-closed | 800 (8.0, 114) throttle more than 3/16 open
	2nd clutch pressure at 2,000 min⁻¹ (rpm) (2 position)	850 – 900 (8.5 – 9.0, 121 – 128)	800 (8.0, 114)
	1st and 1st-hold clutch pressure at 2,000 min⁻¹ (rpm) (1 position)	850 – 900 (8.5 – 9.0, 121 – 128)	800 (8.0, 114)
	Throttle B pressure — Throttle fully closed Throttle fully open	0 (0, 0) 850 – 900 (8.5 – 9.0, 121 – 128)	— 800 (8.0, 114)
Stall speed min⁻¹ (rpm) (Check with car on level ground)	F20Z1 engine H23A3 engine	2500 2700	2350 – 2650 2550 – 2850

(cont'd)

Standards and Service Limits

Automatic Transmission — Section 14 (cont'd)

	MEASUREMENT		STANDARD (NEW)	SERVICE LIMIT
Clutch	Clutch initial clearance	1st-hold	0.80 – 1.00 (0.031 – 0.039)	—
		1st, 2nd	0.65 – 0.85 (0.026 – 0.033)	—
		3rd, 4th	0.4 – 0.6 (0.016 – 0.024)	—
	Clutch return spring free length 1st, 2nd, 3rd, 4th		33.5 (1.32)	31.5 (1.24)
	Clutch disc thickness		1.88 – 2.00 (0.074 – 0.079)	Until grooves worn out.
	Clutch plate thickness			
	1st, 1st-hold		1.95 – 2.05 (0.077 – 0.081)	Discoloration
	2nd, F20Z1 engine		2.55 – 2.65 (0.089 – 0.093)	↑
	H23A3 engine		1.95 – 2.05 (0.077 – 0.081)	↕
	3rd, 4th		2.25 – 2.35 (0.089 – 0.093)	↓ Discoloration
	Clutch end plate thickness	Mark 1	2.05 – 2.10 (0.081 – 0.083)	Discoloration
		Mark 2	2.15 – 2.20 (0.085 – 0.087)	↑
		Mark 3	2.25 – 2.30 (0.089 – 0.091)	
		Mark 4	2.35 – 2.40 (0.093 – 0.094)	
		Mark 5	2.45 – 2.50 (0.096 – 0.098)	
		Mark 6	2.55 – 2.60 (0.100 – 0.102)	
		Mark 7	2.65 – 2.70 (0.104 – 0.106)	
		Mark 8	2.75 – 2.80 (0.108 – 0.110)	
		Mark 9	2.85 – 2.90 (0.112 – 0.114)	↓ Discoloration
Valve body	Stator shaft needle bearing contact I.D.			
	Torque converter side		27.000 – 27.021 (1.0630 – 1.0638)	Wear of damage
	Oil pump side		29.000 – 29.013 (1.1417 –1.1422)	—
	Oil pump gear side clearance		0.03 – 0.05 (0.001 – 0.002)	0.07 (0.003)
	Oil pump gear-to-body clearance	Drive	0.210 – 0.265 (0.0083 – 0.0104)	—
		Driven	0.070 – 0.125 (0.0028 – 0.0049)	—
	Oil pump driven gear I.D.		14.016 – 14.034 (0.5518 – 0.5525)	Wear or damage
	Oil pump shaft O.D.		13.980 – 13.990 (0.5504 – 0.5508)	Wear or damage
Shifting device, parking brake and throttle control system	Reverse shift fork finger thickness		5.90 – 6.00 (0.232 – 0.236)	5.40 (0.213)
	Parking brake ratchet pawl		—	Wear or other defect
	Parking brake gear		—	Wear or other defect
	Throttle cam stopper height		17.0 – 17.1 (0.669 – 0.673)	—
Servo body	Shift fork shaft bore I.D.		14.000 – 14.010 (0.5512 – 0.5516)	—
	Shift fork shaft valve bore I.D.		37.000 – 37.039 (1.4567 – 1.4582)	37.045 (1.4585)
Regulator valve body	Sealing ring contact I.D.		35.000 – 35.025 (1.3780 – 1.3789)	35.05 (1.3799)
Accumulator body	Sealing ring contact I.D.		32.000 – 32.025 (1.2598 – 1.2608)	32.050 (1.2618)
Stator shaft	Sealing ring contact I.D.		29.000 – 29.013 (1.1417 – 1.1422)	29.050 (1.1437)
Transmission	Diameter of needle bearing contact area			
	On mainshaft of stator shaft		22.984 – 23.000 (0.9049 – 0.9055)	Wear or damage
	On mainshaft of 3rd gear collar		45.984 – 46.000 (1.8104 – 1.8110)	↑
	On mainshaft of 4th gear collar		31.984 – 32.000 (1.2592 – 1.2598)	
	On countershaft of 1st gear collar		40.984 – 41.000 (1.6135 – 1.6142)	
	On countershaft of 4th gear collar		31.975 – 31.991 (1.2589 – 1.2595)	
	On countershaft of parking gear		39.984 – 40.000 (1.5742 – 1.5748)	
	On countershaft of reverse gear		35.979 – 36.000 (1.4165 – 1.4173)	
	On secondary shaft of 1st gear		31.975 – 31.991 (1.2589 – 1.2595)	
	On secondary shaft of 2nd gear		31.975 – 31.991 (1.2589 – 1.2595)	
	On reverse idler gear shaft		13.990 – 14.000 (0.5508 – 0.5512)	
	Inside diameter			
	Mainshaft 3rd gear		52.000 – 52.019 (2.0472 – 2.0480)	
	Mainshaft 4th gear		38.005 – 38.021 (1.4963 – 1.4969)	
	Countershaft 1st gear		47.000 – 47.016 (1.8504 – 1.8510)	
	Countershaft 4th gear		38.000 – 38.016 (1.4961 – 1.4967)	
	Countershaft reverse gear		42.000 – 42.016 (1.6535 – 1.6542)	
	Countershaft idler gear		48.000 – 48.016 (1.8898 – 1.8904)	
	Secondary shaft 1st gear		36.000 – 36.016 (1.4173 – 1.4179)	
	Secondary shaft 2nd gear		37.000 – 37.016 (1.4567 – 1.4573)	↓
	Reverse idler gear shaft holder		14.800 – 14.824 (0.5827 – 0.5836)	Wear or damage

Automatic Transmission — Section 14

Unit of length: mm (in)

	MEASUREMENT	STANDARD (NEW)	SERVICE LIMIT
Transmission (cont'd)	Mainshaft 3rd gear collar length	19.50 – 19.55 (0.768 – 0.770)	Wear or damage
	Mainshaft 4th gear collar length	47.50 – 47.55 (1.870 – 1.872)	Wear or damage
	Countershaft 1st gear collar length	27.50 – 27.55 (1.083 – 1.085)	Wear or damage
	Thrust washer thickness		
	Countershaft 1st gear	1.45 – 1.50 (0.057 – 0.059)	Wear or damage
	Countershaft idler gear	3.45 – 3.55 (0.136 – 0.140)	Wear or damage
	Secondary shaft 2nd gear	4.35 – 4.45 (0.171 – 0.175)	Wear or damage
	Countershaft parking gear length	25.030 – 25.048 (0.9854 – 0.9861)	Wear or damage
	Secondary shaft 1st gear distance collar length	4.95 – 5.00 (0.195 – 0.197)	Wear or damage
	Secondary shaft 2nd gear spline washer thickness 35 x 53 mm	4.02 – 4.05 (0.158 – 0.159)	—
		4.07 – 4.10 (0.160 – 0.161)	—
		4.12 – 4.15 (0.162 – 0.163)	—
		4.17 – 4.20 (0.164 – 0.165)	—
		4.22 – 4.25 (0.166 – 0.167)	—
		4.27 – 4.30 (0.168 – 0.169)	—
		4.32 – 4.35 (0.170 – 0.171)	—
		4.37 – 4.40 (0.172 – 0.173)	—
		4.42 – 4.45 (0.174 – 0.175)	—

	MEASUREMENT	STANDARD (NEW)			
		Wire Dia.	O.D.	Free Length	No. of Coils
Spring	Regulator valve spring A				
	F20Z1 engine	1.8 (0.071)	14.7 (0.579)	86.5 (3.406)	16.5
	H23A3 engine	1.8 (0.071)	14.7 (0.579)	88.6 (3.488)	16.5
	Regulator valve spring B	1.8 (0.071)	9.6 (0.378)	44.0 (1.732)	12.5
	Stator reaction spring	4.5 (0.177)	35.4 (1.394)	30.3 (1.193)	1.92
	Torque converter check valve spring	1.1 (0.043)	8.4 (0.331)	38.2 (1.504)	14.0
	Relief valve spring	1.0 (0.039)	8.4 (0.331)	39.1 (1.539)	15.1
	Cooler relief valve spring	1.1 (0.043)	8.4 (0.331)	46.8 (1.843)	17.0
	2nd orifice control valve spring	0.6 (0.024)	6.6 (0.260)	58.3 (2.295)	15.8
	Orifice control valve spring	0.8 (0.031)	6.6 (0.260)	52.5 (2.067)	33.0
	4th exhaust valve spring	0.9 (0.035)	7.1 (0.280)	60.8 (2.394)	28.9
	Throttle valve B adjusting spring	0.8 (0.031)	6.2 (0.244)	30.0 (1.181)	8.0
	Throttle valve B spring	1.4 (0.055)	8.5 (0.335)	41.5 (1.634)	10.5
		1.4 (0.055)	8.5 (0.335)	41.5 (1.634)	11.2
		1.4 (0.055)	8.5 (0.335)	41.6 (1.638)	12.4
	1-2 shift valve spring	1.0 (0.039)	8.6 (0.339)	41.3 (1.626)	16.9
	2-3/3-4 shift valve spring	0.9 (0.035)	7.6 (0.299)	57.0 (2.244)	26.8
	1st-hold accumulator spring	4.0 (0.157)	25.0 (0.984)	64.7 (2.547)	7.3
	1st accumulator spring	1.8 (0.071)	16.3 (0.642)	115.4 (4.543)	18.6
	4th accumulator spring	2.9 (0.114)	22.0 (0.866)	90.1 (3.547)	10.9
	2nd accumulator spring	3.5 (0.138)	22.0 (0.866)	77.1 (3.035)	10.0
	3rd accumulator spring	2.8 (0.110)	17.5 (0.689)	94.2 (3.709)	16.1
	Lock-up shift valve spring	0.9 (0.035)	7.6 (0.229)	73.7 (2.902)	32.0
	Lock-up timing valve spring	0.8 (0.031)	6.6 (0.260)	51.1 (2.012)	14.7
	Servo control valve spring	1.0 (0.039)	8.1 (0.319)	52.6 (2.071)	22.4
	CPC valve spring	1.4 (0.055)	9.4 (0.370)	33.0 (1.299)	10.5
	Modulator valve spring	1.4 (0.055)	9.4 (0.370)	33.0 (1.299)	10.5
	Lock-up control valve spring	0.7 (0.028)	6.6 (0.260)	38.0 (1.496)	14.1
	3rd kick-down valve spring	1.1 (0.043)	7.6 (0.299)	48.3 (1.902)	23.3
	3-2 kick-down valve spring	1.2 (0.047)	7.1 (0.280)	46.9 (1.846)	20.6

Standards and Service Limits

Differential (Manual transmission) — Section 15

	MEASUREMENT	STANDARD (NEW)	SERVICE LIMIT
Differential carrier	Pinion shaft contact area I.D.	18.000 – 18.018 (0.7087 – 0.7094)	—
	Carrier-to-pinion clearance	0.017 – 0.047 (0.0007 – 0.0019)	0.10 (0.004)
	Driveshaft contact area I.D.	28.005 – 28.025 (1.1026 – 1.1033)	—
	Carrier-to-driveshaft clearance R	0.025 – 0.066 (0.0010 – 0.0026)	0.12 (0.005)
	L	0.055 – 0.091 (0.0022 – 0.0036)	0.15 (0.006)
Differential pinion gear	Backlash	0.05 – 0.15 (0.002 – 0.006)	Adjust with a shim
	I.D.	18.042 – 18.066 (0.7103 – 0.7113)	—
	Pinion gear-to-pinion shaft clearance	0.055 – 0.095 (0.0022 – 0.0037)	0.15 (0.006)
Tapered roller bearing preload	Starting torque N·m (kg-cm, lb-in)	1.4 – 2.6 (14 – 26, 12 – 23)	Adjust with a shim

Differential (Automatic transmission) — Section 15

	MEASUREMENT	STANDARD (NEW)	SERVICE LIMIT
Differential carrier	Pinion shaft contact area I.D.	18.000 – 18.018 (0.7087 – 0.7094)	—
	Carrier-to-pinion clearance	0.013 – 0.047 (0.0005 – 0.0019)	0.10 (0.004)
	Driveshaft contact area I.D.	28.005 – 28.025 (1.1026 – 1.1033)	—
	Carrier-to-driveshaft clearance	0.025 – 0.066 (0.0010 – 0.0026)	0.12 (0.005)
Differential pinion gear	Backlash	0.08 – 0.15 (0.003 – 0.006)	Adjust with a shim
	I.D.	18.042 – 18.066 (0.7103 – 0.7113)	—
	Pinion gear-to-pinion shaft clearance	0.055 – 0.095 (0.0022 – 0.0037)	0.12 (0.005)
Tapered roller bearing preload	Starting torque N·m (kg-cm, lb-in) New bearing	2.8 – 4.0 (28 – 40, 24 – 35)	Adjust with a shim
	Reused bearing	2.5 – 3.7 (25 – 37, 22 – 32)	

Steering — Section 17

	MEASUREMENT	STANDARD (NEW)
Steering wheel	Rotational play at steering wheel circumference	0 – 10 (0 – 0.4)
Gearbox	Angle of rack-guide-screw loosened from locked position	$20^{\circ}\ ^{+5^{\circ}}_{0}$
Pump	Pump pressure with shut-off valve closed kPa (kg/cm², psi)	8,000 – 9,000 (80 – 90, 1,138 – 1,280)
Power steering fluid	Recommended fluid	Honda power steering fluid-V
	Fluid capacity System	1.8 (1.9, 1.6)
	ℓ (US qt, Imp qt) Reservoir	0.5 (0.5, 0.4)
Power steering belt*	Deflection with 100 N (10 kg, 22 lbs) between pulleys	12.5 – 16.0 (0.50 – 0.62) with used belt 9.5 – 11.5 (0.37 – 0.45) with new belt
	Belt tension N (kg, lbs) Measured with belt tension gauge	350 – 500 (35 – 50, 77 – 110) with used belt 700 – 900 (70 – 90, 154 – 200) with new belt

* When using a new belt, adjust deflection or tension to new values. Run the engine for 5 minutes then turn it off. Readjust deflection or tension to used belt values.

Suspension — Section 18

Unit of length: mm (in)

	MEASUREMENT		STANDARD (NEW)	SERVICE LIMIT
Wheel alignment	Camber	Front	0°00′ ± 1°	
		Rear	−0°30′ ± 30′	
	Caster	Front	3°00′ ± 1°	
	Total toe	Front	0 ± 3.0 (0 ± 0.12)	
		Rear	IN 2.0 ± 2.0 (0.08 ± 0.08)	
	Front wheel turning angle Inward wheel		39°00′ ± 2°	
	Outward wheel		30°00′	
Wheel	Rim runout (Aluminum wheel)	Axial	0 – 0.7 (0 – 0.03)	2.0 (0.08)
		Radial	0 – 0.7 (0 – 0.03)	1.5 (0.06)
	Rim runout (Steel wheel)	Axial	0 – 1.0 (0 – 0.04)	2.0 (0.08)
		Radial	0 – 1.0 (0 – 0.04)	1.5 (0.06)
Wheel bearing	End play	Front	0 – 0.05 (0 – 0.002)	—
		Rear	0 – 0.05 (0 – 0.002)	—

Brakes — Section 19

	MEASUREMENT		STANDARD (NEW)	SERVICE LIMIT
Parking brake lever	Play in stroke 200 N (20 kg, 44 lbs) lever force		To be locked when pulled 7 – 11 notches	—
Foot brake pedal	Pedal height (with floor mat removed)	M/T	190 (7.5)	—
		A/T	195 (7.7)	—
	Free play		1 – 5 (1/16 – 13/64)	—
Master cylinder	Piston-to-pushrod clearance		0 – 0.04 (0 – 0.016)	—
Disc brake	Disc thickness	Front	23.0 (0.09)	21.0 (0.83)
		Rear	10.0 (0.39)	8.0 (0.31)
	Disc runout	Front	—	0.10 (0.004)
		Rear	—	0.10 (0.004)
	Disc parallelism	Front and rear	—	0.015 (0.0006)
	Pad thickness Front	2.0 ℓ M/T	12.5 (0.49)	1.6 (0.06)
		2.0 ℓ A/T and 2.3 ℓ	11.0 (0.43)	1.6 (0.06)
	Rear		9.0 (0.35)	1.6 (0.06)
	Characteristics	Vacuum [mm (in) Hg]	Pedal Force kg (lbs)	Line Pressure kPa (kg/cm², psi)
	Without ABS	0 (0)	20 (44)	920 (9.4, 130) minimum
		300 (11.8)	20 (44)	5,500 (56, 800) minimum
		500 (19.7)	20 (44)	8,500 (87, 1,200) minimum
	With ABS	0 (0)	20 (44)	810 (8.3, 120) minimum
		300 (11.8)	20 (44)	6,100 (62, 880) minimum
		500 (19.7)	20 (44)	8,200 (83.2, 1,200) minimum

Standards and Service Limits

Unit of length: mm (in)

Air Conditioning — Section 22

	MEASUREMENT		STANDARD (NEW)
Air conditioning system	Lubricant capacity mℓ (fl oz, Imp oz)	Condenser	10 – 20 (1/3 – 2/3, 0.4 – 0.7)
		Evaporator	20 – 30 (2/3 – 1, 0.7 – 1.1)
		Line or hose	10 (1/3, 0.4)
		Receiver	10 (1/3, 0.4)
Compressor	Lubricant capacity mℓ (fl oz, Imp oz)		160 $^{+15}_{0}$ (5-1/3 $^{+1/2}_{0}$, 5.6 $^{+0.5}_{0}$)
	Stator coil resistance at 20°C (68°F) Ω		3.6 ± 0.2
	Pulley-to-pressure plate clearance		0.5 ± 0.15 (0.020 ± 0.006)
Compressor belt*	Deflection with 100 N (10 kg, 22 lbs) between the pulleys		10.0 – 12.0 (0.39 – 0.47) with used belt 4.5 – 7.0 (0.18 – 0.28) with new belt
	Belt tension N (kg, lbs) Measured with belt tension gauge		450 – 600 (45 – 60, 99 – 132) with used belt 950 – 1,150 (95 – 115, 209 – 254) with new belt

Electrical — Section 23

	MEASUREMENT		STANDARD (NEW)
Ignition coil	Rated voltage V		12
	Primary winding resistance Ω at 20°C (68°F)		0.6 – 0.8
	Secondary winding resistance kΩ at 20°C (68°F)		13 – 19
Spark Plug	Type		See section 23 (Base manual code No. 62SN700 and Supplement 93 code No. 62SN720)
	Gap		1.0 – 1.1 (0.039 – 0.043)
Ignition timing	At idling	° BTDC	15 ± 2 (Red)
Alternator belt*	Without A/C	Deflection with 100 N (10 kg, 22 lbs) between pulleys	10 – 12 (0.39 – 0.47) with used belt 8.5 – 11 (0.33 – 0.43) with new belt
		Belt tension N (kg, lbs) Measured with belt tension gauge	300 – 450 (30 – 45, 66 – 99) with used belt 450 – 650 (45 – 65, 99 – 143) with new belt
	With A/C	Deflection with 100 N (10 kg, 22 lbs) between pulleys	10 – 12 (0.39 – 0.47) with used belt 4.5 – 7 (0.18 – 0.28) with new belt
		Belt tension N (kg, lbs) Measured with belt tension gauge	450 – 600 (45 – 60, 99 – 132) with used belt 950 – 1,150 (95 – 115, 209 – 254) with new belt

	MEASUREMENT	STANDARD (NEW)	SERVICE LIMIT
Alternator	Output 13.5 V at hot A	70/80	—
	Coil resistance (rotor) Ω	2.8 – 3.0	—
	Slip ring O.D.	14.4 (0.57)	14.0 (0.55)
	Brush length	10.5 (0.41)	5.5 (0.22)
	Brush spring tension g (oz)	300 – 360 (10.6 – 12.7)	—
Starter motor	Type	Spur gear reduction, permanent magnet	
	Mica depth	0.4 – 0.5 (0.016 – 0.020)	0.15 (0.006)
	Commutator runout	0 – 0.02 (0 – 0.0008)	0.05 (0.002)
	Commutator O.D.	28.0 – 28.1 (1.102 – 1.106)	27.5 (1.08)
	Brush length	15.8 – 16.2 (0.62 – 0.64)	10.0 (0.39)
	Brush spring tension (new) N (kg, lbs)	16 – 18 (1.6 – 1.8, 3.5 – 4.0)	—

* When using a new belt, adjust deflection or tension to new values. Run the engine for 5 minutes then turn it off. Readjust deflection or tension to used belt values.

Design Specifications

	ITEM	METRIC	ENGLISH	NOTES
DIMENSIONS	Overall Length	4,675 mm	184.1 in	
	Overall Width	1,715 mm	67.5 in	
	Overall Height	1,380 mm	54.3 in	
	Wheelbase	2,720 mm	107.1 in	
	Track (Front/Rear)	1,475/1,480 mm	58.1/58.3 in	
	Ground Clearance	155 mm	6.1 in	
	Seating Capacity	Five		
WEIGHT	Curb Weight			
	2.0i M/T (KG model)	1,240 kg	2,734 lbs	Without ABS
	2.0i M/T (KG, KE models)	1,280 kg	2,822 lbs	With ABS
	2.0i S M/T (KG model)	1,255 kg	2,767 lbs	Without ABS
	2.0i S M/T (KS model)	1,260 kg	2,778 lbs	Without ABS
	2.0i S M/T (KG, KE models)	1,295 kg	2,855 lbs	With ABS
	2.0i S A/T (KG model)	1,325 kg	2,921 lbs	
	2.0i LS M/T (KG model) F20Z2 engine	1,270 kg	2,800 lbs	Without ABS
	2.0i LS M/T (KG, KE models) F20Z2 engine	1,300 kg	2,866 lbs	With ABS
	2.0i LS M/T (KG, KE models) F20Z1 engine	1,285 kg	2,833 lbs	
	2.0i LS M/T (KS model) F20Z1 engine	1,305 kg	2,877 lbs	
	2.0i LS A/T (KG, KE models) F20Z1 engine	1,330 kg	2,932 lbs	
	2.0i LS A/T (KS model) F20Z1 engine	1,350 kg	2,976 lbs	
	2.0i ES M/T (KG, KE models)	1,345 kg	2,965 lbs	
	2.0i ES A/T (KG, KE models)	1,375 kg	3,031 lbs	
	2.3i SR M/T (KG, KE models)	1,355 kg	2,987 lbs	
	2.3i SR M/T (KS model)	1,345 kg	2,965 lbs	
	2.3i SR A/T (KE model)	1,377 kg	3,036 lbs	
	Weight Distributions (Front/Rear)			
	2.0i M/T (KG model)	745/495 kg	1,642/1,091 lbs	Without ABS
	2.0i M/T (KG, KE models)	770/510 kg	1,698/1,124 lbs	With ABS
	2.0i S M/T (KG model)	755/500 kg	1,664/1,102 lbs	Without ABS
	2.0i S M/T (KS model)	760/500 kg	1,675/1,102 lbs	Without ABS
	2.0i S M/T (KG, KE models)	780/515 kg	1,720/1,135 lbs	With ABS
	2.0i S A/T (KG model)	810/515 kg	1,786/1,135 lbs	
	2.0i LS M/T (KG model) F20Z2 engine	755/515 kg	1,664/1,135 lbs	Without ABS
	2.0i LS M/T (KG, KE models) F20Z2 engine	780/520 kg	1,720/1,146 lbs	With ABS
	2.0i LS M/T (KG, KE models) F20Z1 engine	770/515 kg	1,698/1,135 lbs	
	2.0i LS M/T (KS model) F20Z1 engine	785/520 kg	1,731/1,146 lbs	
	2.0i LS A/T (KG, KE models) F20Z1 engine	810/520 kg	1,786/1,146 lbs	
	2.0i LS A/T (KS model) F20Z1 engine	825/525 kg	1,819/1,157 lbs	
	2.0i ES M/T (KG, KE models)	820/525 kg	1,808/1,157 lbs	
	2.0i ES A/T (KG, KE models)	850/525 kg	1,874/1,157 lbs	
	2.3i SR M/T (KG, KE models)	830/525 kg	1,830/1,157 lbs	
	2.3i SR M/T (KS model)	815/530 kg	1,797/1,168 lbs	
	2.3i SR A/T (KE model)	854/523 kg	1,883/1,153 lbs	
	Max. Permissible Weight (European)			
	2.0 ℓ M/T	1,820 kg	4,012 lbs	
	2.0 ℓ A/T	1,880 kg	4,145 lbs	
	2.3 ℓ M/T and A/T	1,880 kg	4,145 lbs	
ENGINE	Type — F20Z1, F20Z2 engines	Water-cooled, 4-stroke SOHC gasoline engine		
	Type — H23A3 engine	Water-cooled, 4-stroke DOHC gasoline engine		
	Cylinder Arrangement	4-cylinders Inline, transverse		
	Bore and Stroke — F20Z1, F20Z2 engines	85.0 x 88.0 mm	3.35 x 3.46 in	
	Bore and Stroke — H23A3 engine	87.0 x 95.0 mm	3.42 x 3.74 in	
	Displacement — F20Z1, F20Z2 engines	1,997 cm³ (mℓ)	121.8 cu-in	
	Displacement — H23A3 engine	2,259 cm³ (mℓ)	137.8 cu-in	
	Compression Ratio — F20Z1 engine	9.5 : 1		
	Compression Ratio — F20Z2 engine	9.0 : 1		
	Compression Ratio — H23A3 engine	9.8 : 1		
	Valve Train — F20Z1, F20Z2 engines	Belt driven, 4 valves per cylinder, single overhead camshaft		
	Valve Train — H23A3 engine	Belt driven, 4 valves per cylinder, double overhead camshaft		

(cont'd)

Design Specifications

(cont'd)

	ITEM	METRIC	ENGLISH	NOTES
ENGINE (cont'd)	Lubrication System	Forced and wet sump, trochoid pump		
	Oil Pump Displacement [At oil temp. 36.5°C (98°F)]			
	F20Z1, F20Z2 engines	53.7 ℓ/minute at 6,000 pump min^{-1} (rpm)		
	H23A3 engine	59.1 ℓ/minute at 6,000 pump min^{-1} (rpm)		
	Fuel Required	Premium UNLEADED grade gasoline with 95 Research Octane Number or higher		
	Water Pump Displacement [At coolant temp. 40°C (104°F)]			
	F20Z1, F20Z2 engines	150 ℓ/minute at 6,000 pump min^{-1} (rpm)		
	H23A3 engine	152 ℓ/minute at 6,000 pump min^{-1} (rpm)		
STARTER	Type	Spur gear reduction, permanent magnet		
	Normal Output	1.4 kW, 1.6 kW		
	Nominal Voltage	12 V		
	Hour Rating	30 seconds		
	Direction of Rotation	Counterclockwise as viewed from gear end		
	Weight 1.4 kW	3.5 kg	7.7 lbs	
	Weight 1.6 kw	3.7 kg	8.2 lbs	
CLUTCH	Clutch Type M/T	Single plate dry, diaphragm spring		
	Clutch Type A/T	Torque converter		
	Clutch Facing Area M/T	217 cm^2	33.6 sq-in	
TRANSMISSION	Transmission M/T	Synchronized 5-speed forward, 1 reverse		
	Transmission A/T	Electronically controlled dual range 4-speed forward automatic, 1 reverse		
	Primary Reduction	Direct 1 : 1		

Type	Engine Type	Manual F20Z1	Manual F20Z2	Manual H23A3	Automatic
Gear Ratio	1st	3.307	3.307	3.307	2.705
	2nd	1.809	1.809	1.809	1.366
	3rd	1.230	1.185	1.269	1.028
	4th	0.933	0.903	0.966	0.731
	5th	0.757	0.735	0.757	—
	Reverse	3.000	3.000	3.000	2.047
Final Reduction	Gear type	Single helical gear			
	Gear ratio	4.266			4.285

AIR CONDITIONING	Cooling Capacity	4,100 Kcal/h	16,269 BTU/h	
	Compressor Type/Make	Swash-plate/NIPPONDENSO		
	Compressor No. of Cylinder	10		
	Compressor Capacity	178 cm^3/rev	10.9 cu-in/rev	
	Compressor Max. Speed	8,800 min^{-1} (rpm)		
	Compressor Lubricant Capacity	160 mℓ	5-1/3 fl oz, 5.6 Imp oz	ND-OIL8
	Condenser Type	Corrugated fin		
	Evaporator Type	Corrugated fin		
	Blower Type	Sirocco fan		
	Blower Motor Input	209 W max./12 V		
	Blower Speed Control	5-speed		
	Blower Max. Capacity	420 m^3/h	14,834 cu-ft/h	
	Temp. Control	Air-mix type		
	Compressor Clutch Type	Dry, single plate, poly-V-belt drive		
	Compressor Clutch Power Consumption	40 W max./12 V		
	Refrigerant Type	HFC-134a (R-134a)		
	Refrigerant Quantity	750^{0}_{-50} g	$26.5^{0}_{-1.80}$ oz	

	ITEM	METRIC	ENGLISH	NOTES
STEERING SYSTEM	Type	Power assisted, rack and pinion		
	Overall Ratio	16.4		
	Turns, Lock-to-Lock	3.14		
	Steering Wheel Diameter	380 mm	15.0 in	
SUSPENSION	Type, Front	Independent double wishbone, coil spring with stabilizer		
	Type, Rear	Independent double wishbone, coil spring with stabilizer		
	Shock Absorber, Front and Rear	Telescopic, hydraulic nitrogen gas-filled		
WHEEL ALIGNMENT	Camber Front	0° 00′		
	Camber Rear	−0° 30′		
	Caster	3° 00′		
	Total Toe Front	0 mm	0 in	
	Total Toe Rear	In 2.0 mm	In 0.08 in	
BRAKE SYSTEM	Type: Front	Power-assisted self-adjusting ventilated disc		
	Type: Rear	Power-assisted self-adjusting solid disc		
	Pad Surface Area:			
	Front 2.0 ℓ M/T	49.4 cm² x 2	7.66 sq-in x 2	
	Front 2.0 ℓ A/T and 2.3 ℓ	58.0 cm² x 2	8.99 sq-in x 2	
	Rear	29.7 cm² x 2	4.60 sq-in x 2	
	Parking Brake	Mechanical actuating, rear two wheel brakes		
TYRE	Size and Pressure	See tyre information label (see page 1-12)		
ELECTRICAL	Battery	KG (KF): 12 V – 57 AH/20 HR		
		KE: 12 V – 47 AH/20 HR		
		KS: 12 V – 55 AH/20 HR		
	Starter	12 V – 1.4 kW, 1.6 kW		
	Alternator	12 V – 70 A		
	Fuses			
	In the under-dash fuse/relay box	7.5 A, 10 A, 15 A, 30 A		
	In the under-hood fuse/relay box	7.5 A, 10 A, 15 A, 20 A, 30 A, 40 A, 50 A, 80 A		
	In the under-hood ABS fuse/relay box	7.5 A, 15 A, 50 A		
	Headlights	12 V – 55 W (H1)		
	Front Turn Signal Lights	12 V – 21 W (AMBER)		
	Front Position Lights	12 V – 5 W		
	Side Turn Signal Lights	12 V – 5 W		
	Rear Turn Signal Lights	12 V – 21 W		
	Stop/Taillights	12 V – 21/5 W		
	Back-up Lights	12 V – 21 W		
	Rear Fog Light	12 V – 21 W		
	License Plate Lights	12 V – 5 W		
	Ceiling (Interior) Lights Front	12 V – 5 W		
	Ceiling (Interior) Lights Rear	12 V – 3.4 W		
	Trunk (Boot) Lights	12 V – 3.4 W		
	Door Courtesy Lights	12 V – 3.4 W		
	Glove Box Lights	12 V – 5 W		
	Gauge Lights	12 V – 1.4, 3 W		
	Indicator Lights/Lamps	12 V – 0.84, 1.12, 1.4 W, LED		
	Warning Lights	12 V – 1.4		
	Illumination and Pilot Lights	12 V – 0.56, 0.84, 1.12, 1.4 W		
	Heater Illumination Lights	12 V – 1.4 W		

Body Specifications

Unit: mm (in)

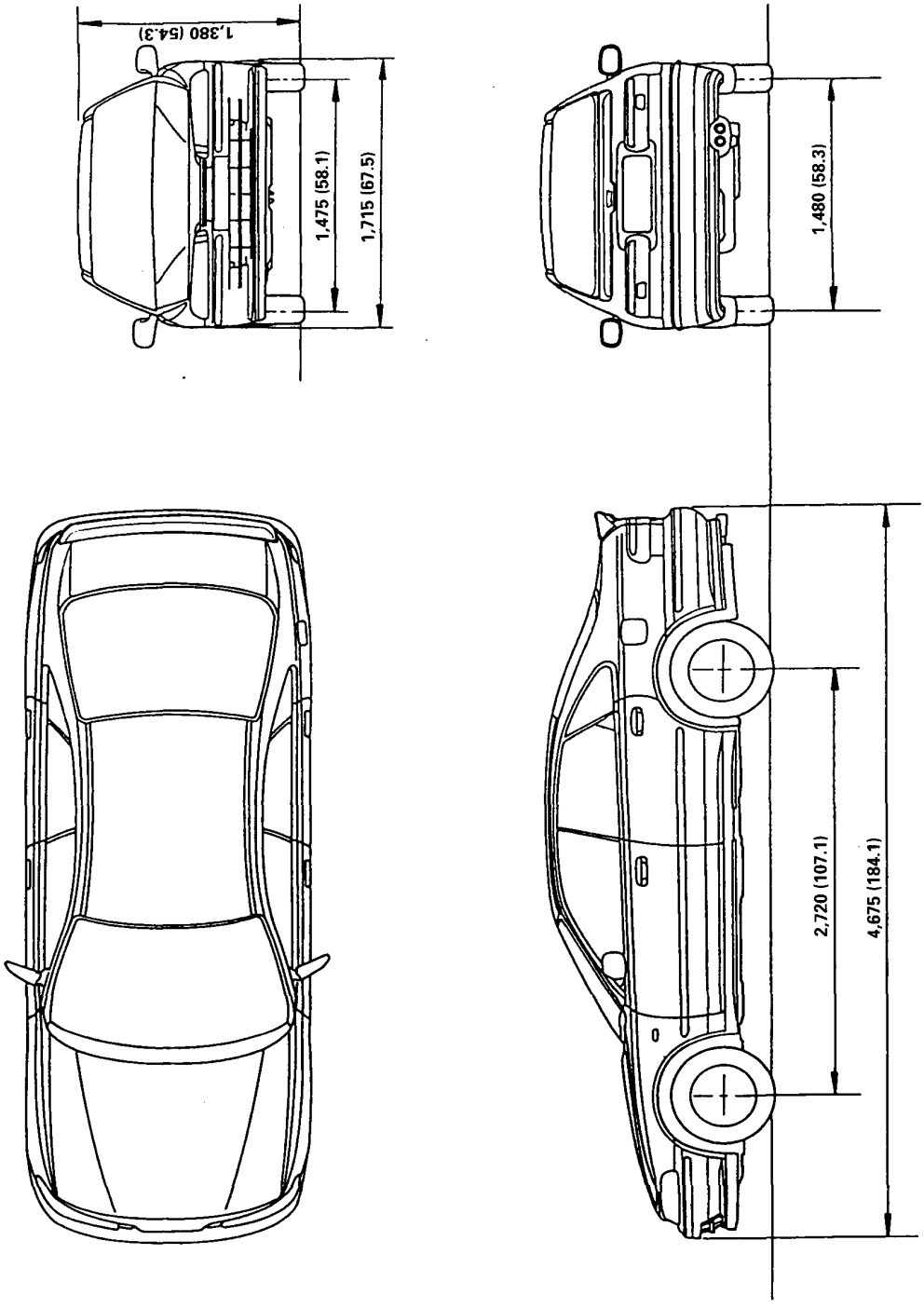

Maintenance

Lubrication Points 4-2
Maintenance Schedule 4-4

Lubrication Points

For the details of lubrication points and types of lubricants to be applied, refer to the illustrated index and various work procedure (such as Assembly/Reassembly, Replacement, Overhaul, Installation, etc.) contained in each section.

No.	LUBRICATION POINTS	LUBRICANT
1	Engine	Always use a fuel-efficient oil is that says "API Service SF, SG or SH." SAE Viscosity: See chart below.
2	Transmission Manual Automatic	API Service Grades: SF or SG SAE Viscosity: 10 W—30 or 10 W—40 Honda Premium Formula Automatic Transmission Fluid or an equivalent DEXRON® II Automatic transmission fluid
3	Brake Line	Brake fluid DOT3 or DOT4
4	Clutch Line	Brake fluid DOT3 or DOT4
5	Power steering gearbox	Steering grease P/N 08733—B070E
6 7	Shift lever pivots (Manual Transmission) Release fork (Manual Transmission)	Urea grease UM264 (P/N 41211—PY5—305)
8	Shift and select cable ends	Silicone oil
9 10 11 12 13 14 15 16 17 18 19 20	Throttle cable end Steering wheel (Except cars with SRS airbag) Select lever (Automatic Transmission) Pedal linkage Battery terminals Brake master cylinder pushrod Trunk hinges and latches Door hinges upper/lower and latches Door open detents Fuel fill led Hood hinges and hood latch Clutch master cylinder pushrod	Multi-purpose grease
21	A/C compressor	Compressor oil ND-OIL8 P/N 38899—PR7—003
22	Rear brake caliper parking lever pin	Rust-preventive agent
23	Power steering system	Honda power steering fluid-V

Select the oil for the car according to this chart:

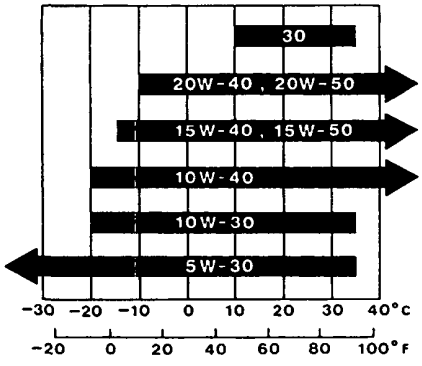

Ambient temperature

CAUTION: Used engine oil may cause skin cancer if repeatedly left in contact with the skin for prolonged periods. Although this is unlikely unless you handle used oil on a daily basis, it is still advisable to thoroughly wash your hands with soap and water as soon as possible after handling used oil.

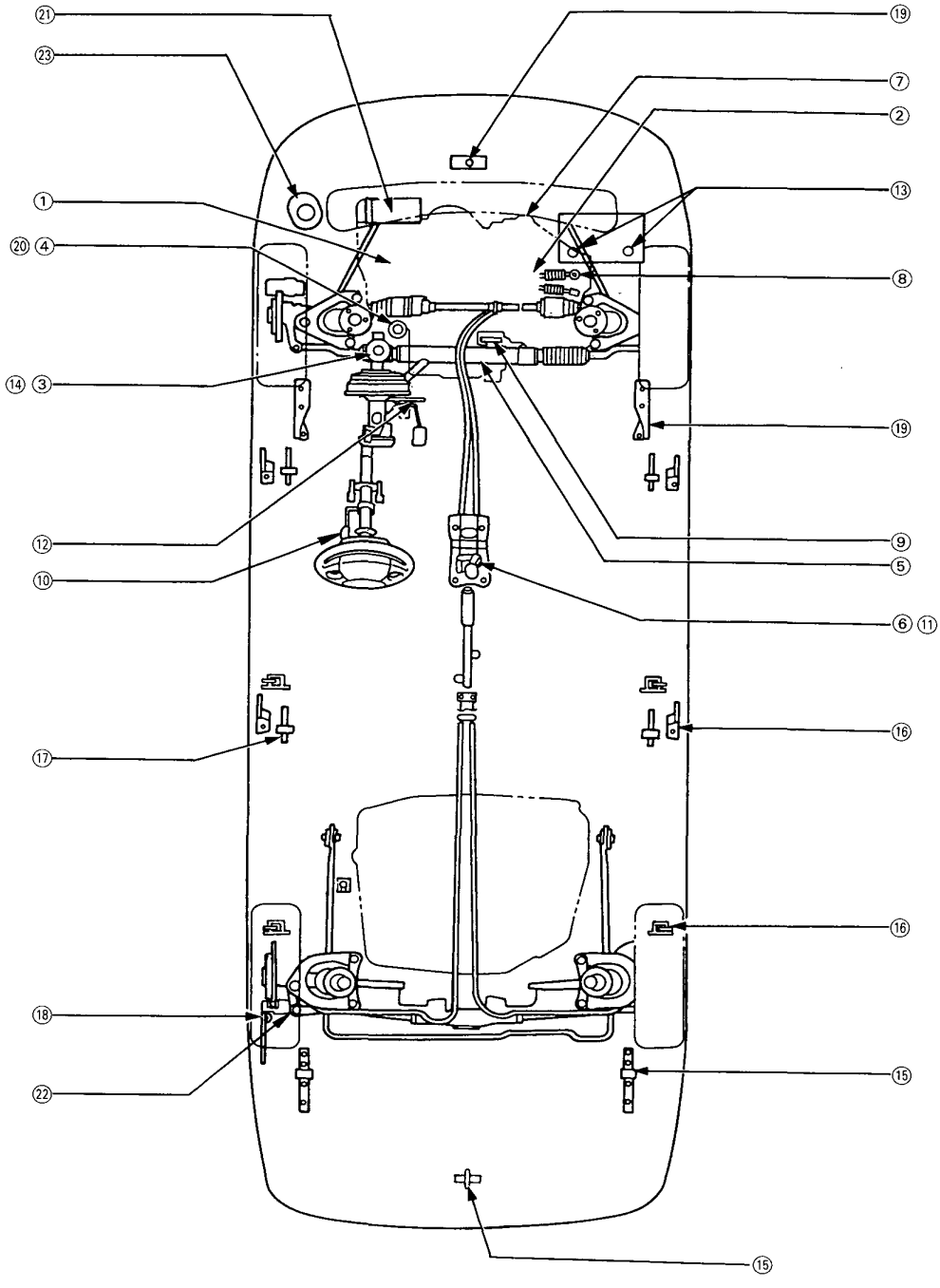
㉑
㉓
①
⑳ ④
⑭ ③
⑫
⑩
⑰
⑱
㉒
⑲
⑦
②
⑬
⑧
⑲
⑨
⑤
⑥ ⑪
⑯
⑯
⑮
⑮

Maintenance Schedule

R—Replace I—Inspect: After inspection, clean, adjust, fill up, repair or replace if necessary.

Service at the interval listed x 1,000 km (or miles) or after that number of months, whichever comes first.	x 1,000 km	20	40	60	80	100	120	140	160	180	200
	x 1,000 miles	12	24	36	48	60	72	84	96	108	120
Maintenance item	months	12	24	36	48	60	72	84	96	108	120
• Engine oil and oil filter		Replace every 10,000 km (6,000 miles) or 12 months									
• Transmission oil				R			R			R	
Valve clearance			I		I		I		I		I
Belt tension and conditions (Alternator, PS pump, A/C compressor)			I		I		I		I		I
Timing belt and timing balancer belt						R					R
Water pump						I					I
Cooling system hoses and connections			I		I		I		I		I
• Engine coolant					R		R		R		R
Spark plugs	Except for KS type		R		R		R		R		R
	For KS type	Replace every 48,000 km (30,000 miles)									
Air cleaner element			R		R		R		R		R
Tank, fuel lines and connections			I		I		I		I		I
Fuel filter			R		R		R		R		R
Positive crankcase ventilation valve						I					I
Idle speed and idle CO		I*1	I*1	I*1	I*1	I	I	I	I	I	I
Front brake pads		Inspect every 10,000 km (6,000 miles) or 12 months									
Front brake discs and calipers		I	I	I	I	I	I	I	I	I	I
Rear brake discs, calipers and pads			I		I		I		I		I
Parking brake operation		I	I		I		I		I		I
Brake fluid (Including ABS)			R		R		R		R		R
Brake hoses and lines		I	I	I	I	I	I	I	I	I	I
Anti-lock brake system operation (Equipped for ABS)		I	I		I		I		I		I
Anti-lock brake system high pressure hose (Equipped for ABS)					R				R		
Exhaust system and condition		I	I	I	I	I	I	I	I	I	I
Catalytic converter heat shield						I					I

•: Day to day care (engine oil, ATF and coolant level) should be done practically according to the owner's manual by the customer.
*1: For KS type, recommended by manufacturer only.

R—Replace I—Inspect: After inspection, clean, adjust, fill up, repair or replace if necessary.

Service at the interval listed x 1,000 km (or miles) or after that number of months, whichever comes first.	x 1,000 km	20	40	60	80	100	120	140	160	180	200
	x 1,000 miles	12	24	36	48	60	72	84	96	108	120
Maintenance item	months	12	24	36	48	60	72	84	96	108	120
Suspension components		I	I	I	I	I	I	I	I	I	I
Steering function, tie-rod ends, gearbox and boots		I	I		I		I		I		I
Power steering function, hoses and connections		I	I	I	I	I	I	I	I	I	I
All fluid levels		Inspect every 10,000 km (6,000 miles) or 12 months									
Battery condition		I	I	I	I	I	I	I	I	I	I
Tyres condition, wear and pressure (Including spare)		Inspect every 10,000 km (6,000 miles) or 12 months									
Lights operation and headlight beam		Inspect every 10,000 km (6,000 miles) or 12 months									
Paint damages and body work		I	I	I	I	I	I	I	I	I	I
Test drive (Noise, stability, dashboard operations)		I	I	I	I	I	I	I	I	I	I
Cleanliness of controls, door handles etc.		Inspect after every service									
Supplemental Restraint System		Inspect system and replace slip ring *2 10 years first registration									

*2: Except for cars with passenger's airbag.

Severe Driving Conditions

The following items must be serviced more frequently on cars normally used under severe driving conditions.
Refer to the chart below for the appropriate maintenance intervals.

Severe driving conditions include:
A: Repeated short distance driving.
B: Driving in dusty conditions.
C: Driving in severe cold weather.
D: Driving in areas using road salt or other corrosive materials.
E: Driving in rough and/or muddy roads.
F: Towing a trailer.

Condition	Maintenance Item	Operation	Interval
A B • • • F	Engine oil and oil filter	R	Every 5,000 km (3,000 miles) or 6 months
• • • • • F	Transmission oil	R	Every 20,000 km (12,000 miles) or 12 months
• B • • E •	Air cleaner element	R	Every 20,000 km (12,000 miles) or 12 months
A B • D E F	Front brake discs and calipers	I	Every 10,000 km (6,000 miles) or 6 months
A B • D E F	Rear brake discs, calipers and pads	I	Every 20,000 km (12,000 miles) or 12 months
• B C • E •	Power steering system	I	Every 10,000 km (6,000 miles) or 6 months

R—Replace
I—Inspect: After inspection, adjust, clean, fill up, repair or replace if necessary.

Engine Removal/Installation

Engine Removal/Installation 5-2

Outline of Model Changes

- The rear mount bracket has been changed.

Mount and Bracket Bolts/Nuts Torque Value Specifications:

REAR MOUNT:

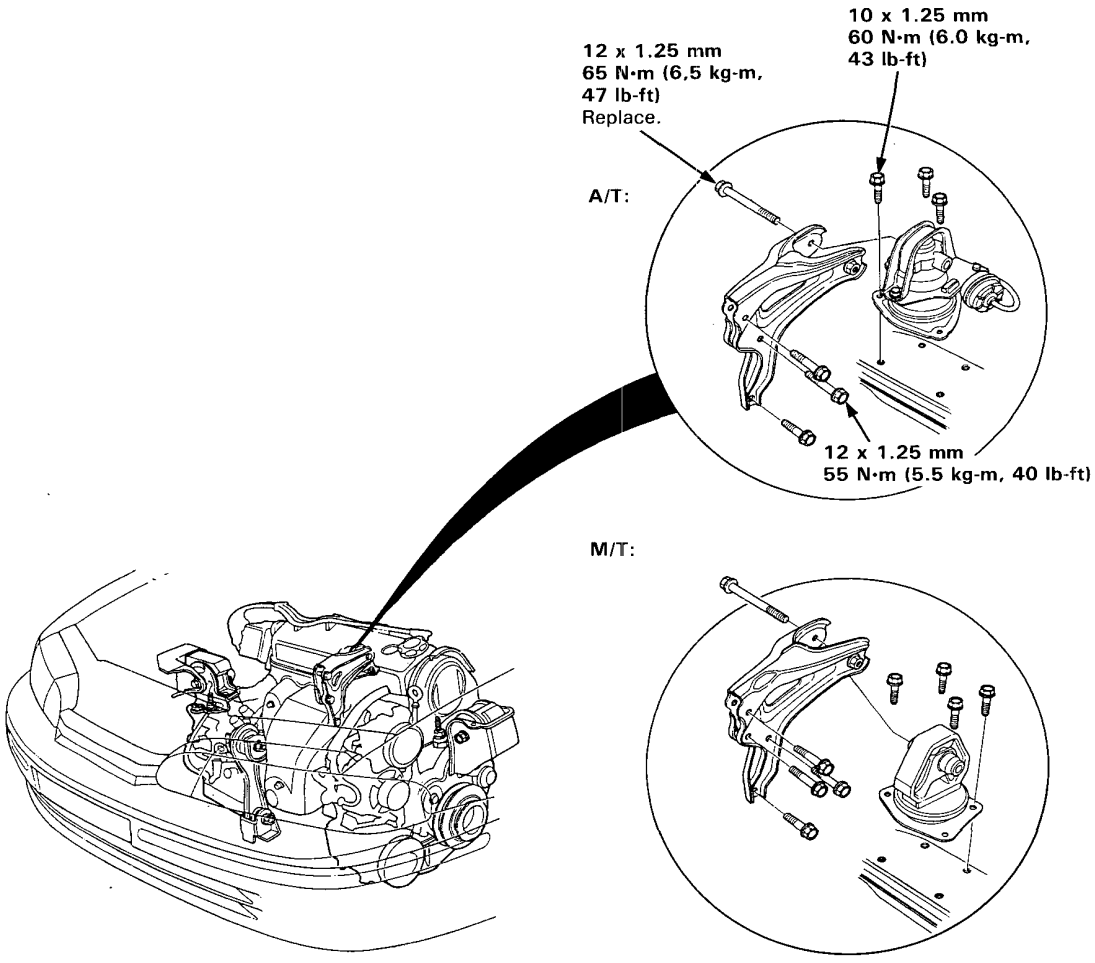

Cooling

Radiator
Illustrated Index 10-2
Water Pump
Inspection 10-4
Replacement 10-4

Outline of Model Changes

- The torque value of self locking nut has been changed.
- The connecting pipe has been changed (H23A3 engine).
- The water pump has been changed.

Radiator

Illustrated Index

⚠ WARNING System is under high pressure when engine is hot. To avoid danger of releasing scalding engine coolant, remove cap only when engine is cold.

Total Cooling System Capacity (Including heater and reservoir)

F20Z1, F20Z2 engines:
M/T: 6.3 ℓ (6.7 US qt, 5.5 Imp qt)
A/T: 6.2 ℓ (6.6 US qt, 5.5 Imp qt)
H23A3 engine:
M/T: 7.0 ℓ (7.4 US qt, 6.2 Imp qt)
A/T: 6.9 ℓ (7.3 US qt, 6.1 Imp qt)
Reservoir capacity: 0.6 ℓ (0.6 US qt, 0.5 Imp qt)

CAUTION: When pouring engine coolant, be sure to shut the relay box lid and not to let coolant spill on the electrical parts or the paint. If any coolant spills, rinse it off immediately.

NOTE:
- Check all cooling system hoses for damage, leaks or deterioration and replace if necessary.
- Check all hose clamps and retighten if necessary.
- Use new O-rings when reassembling.

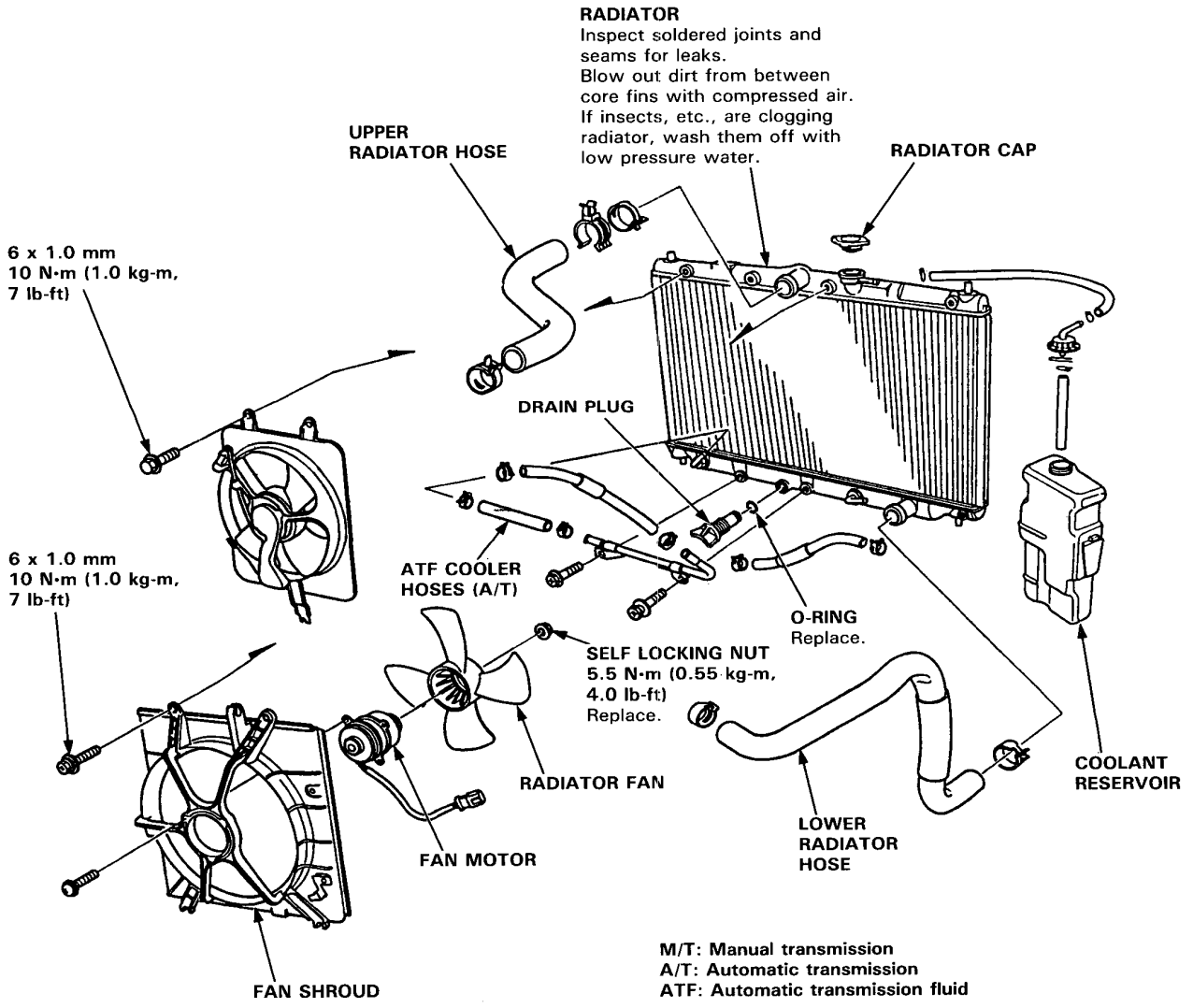

M/T: Manual transmission
A/T: Automatic transmission
ATF: Automatic transmission fluid

Engine Hose Connections:

H23A3 engine:

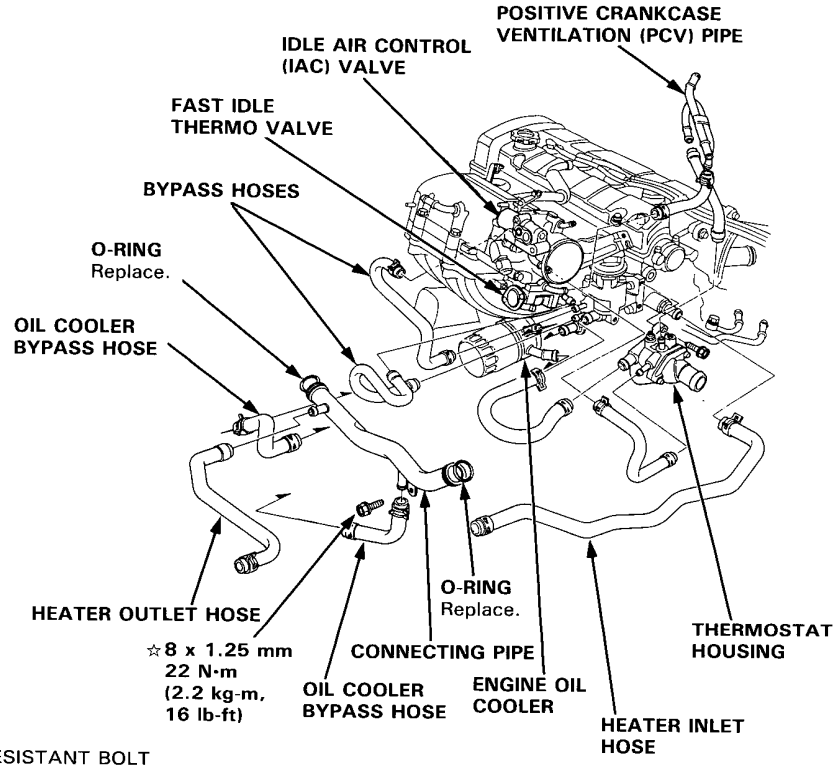

☆: CORROSION RESISTANT BOLT

Water Pump

Inspection

1. Remove the timing belt.
2. Check that the water pump pulley turns counter-clockwise.
3. Check for signs of seal leakage.

   NOTE: A small amount of "weeping" from the bleed hole is normal.

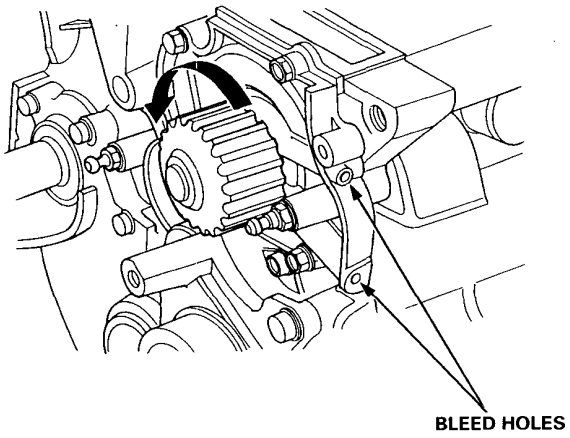

Replacement

1. Remove the timing belt.
2. Remove the camshaft pulley and the back cover.
3. Remove the water pump by removing five bolts.

   NOTE: Inspect, repair and clean the O-ring groove and mating surface with the cylinder block.

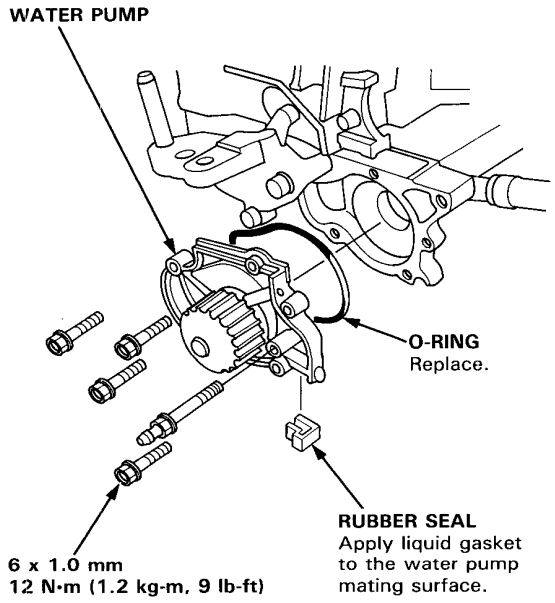

4. Install the water pump in the reverse order of removal.

   NOTE:
   - Keep the O-ring in position when installing.
   - Clean the spilled engine coolant.

Fuel and Emissions

System Description
Electrical Connections 11-2
PGM-FI System
Ignition Output Signal 11-4
Fuel Supply System
PGM-FI Main Relay 11-6

Outline of Model Change

- The main wire harness (Ignition Output Signal, PGM-FI Main Relay circuit) has been changed.

System Description

Electrical Connections

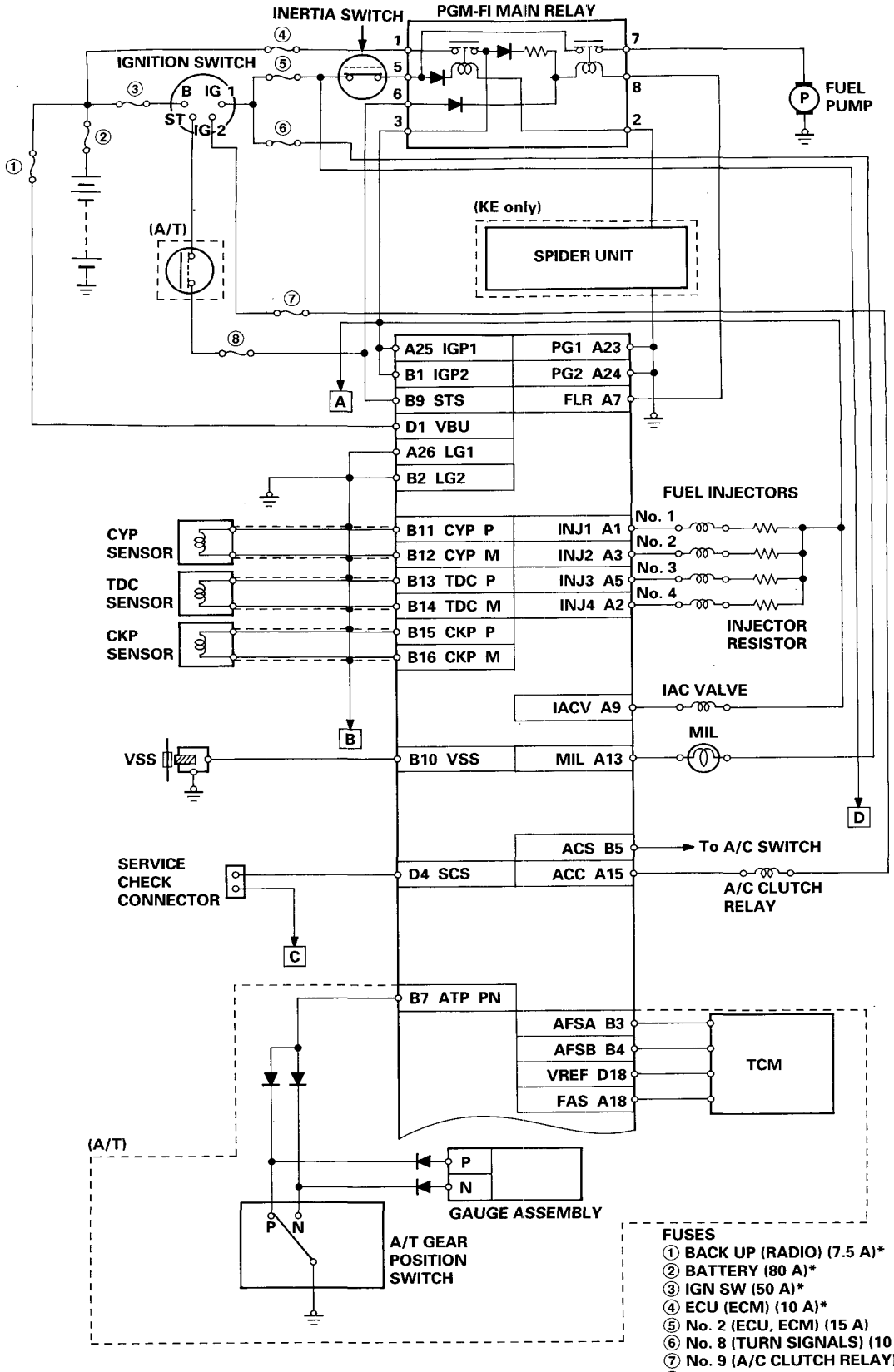

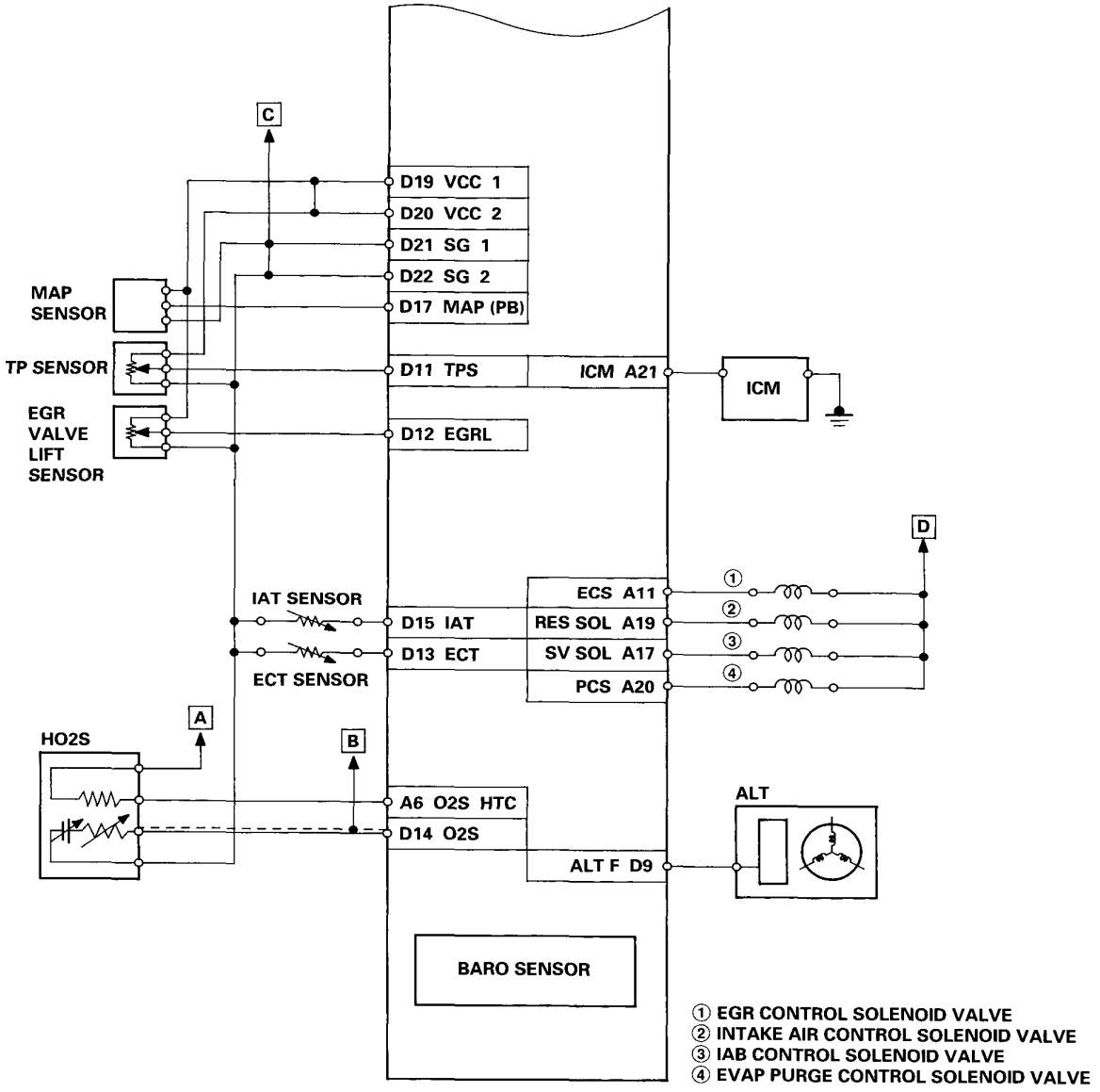

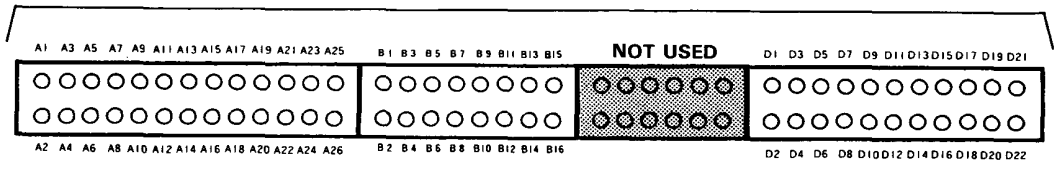

TERMINAL LOCATIONS

Troubleshooting Flowchart — Ignition Output Signal

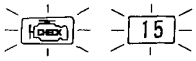

The Malfunction Indicator Lamp (MIL) indicates Diagnostic Trouble Code (DTC) 15: A problem in the Ignition Output Signal circuit.

— The MIL has been reported on.
— With service check connector jumped, code 15 is indicated.

Do the ECM Reset Procedure.

Start the engine.

Is the MIL on and does it indicate code 15?

NO → **Intermittent failure, system is OK at this time (test drive may be necessary).**
Check for poor connections or loose wires between the distributor and ECM.

YES

Turn the ignition switch OFF.

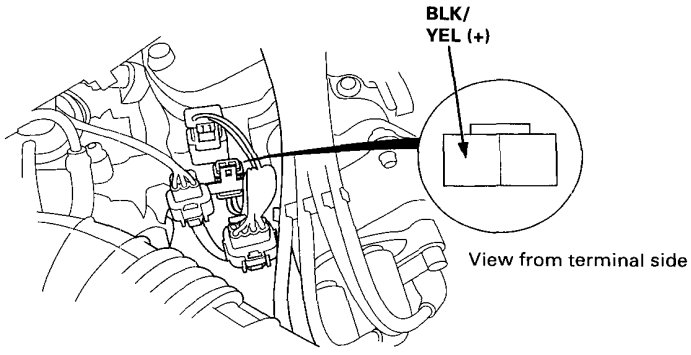

Disconnect the 2P connector from the distributor.

Turn the ignition switch ON.

Measure voltage between BLK/YEL (+) terminal and body ground.

Is there battery voltage?

NO → **Repair open in BLK/YEL wire between 2P connector and ignition switch.**

YES

Turn the ignition switch OFF.

Reconnect the 2P connector.

(To page 11-5)

(From page 11-4)

Disconnect the 8P connector from the distributor.

Turn the ignition switch ON.

Measure voltage between terminal A and body ground.

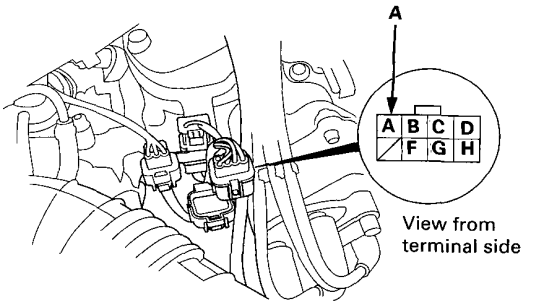

Is there approx. 10 V?

NO → **Replace the ICM.**

YES

Turn the ignition switch OFF.

Connect the test harness between the ECM and connectors.

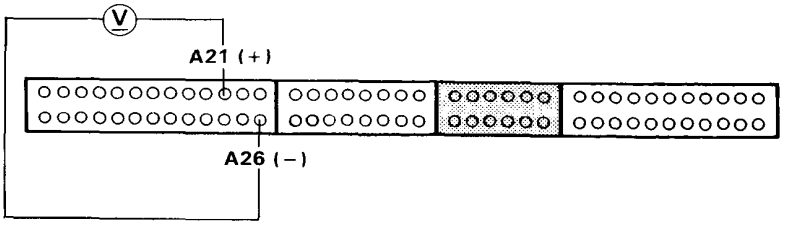

Turn the ignition switch ON.

Measure voltage between A21 (+) terminal and A26 (−) terminal.

Is there approx. 10 V?

NO → **Repair open or short YEL/GRN wire between distributor and ECM (A21).**

YES

Substitute a known-good ECM and recheck. If symptom/indication goes away, replace the original ECM.

PGM-FI Main Relay

Troubleshooting Flowchart

— Engine will not start.
— Inspection of PGM-FI main relay and relay harness.

NOTE: The inertia switch must be reset by pressing the button.

Disconnect the PGM-FI main relay connector.

Measure the voltage between YEL/BLU (+) terminal ① and body ground.

Is there battery voltage?

NO →
— Replace the ECM (ECM) (10 A) fuse in the under-hood fuse/relay box.
— Repair open in the YEL/BLU wire between the PGM-FI main relay and the ECU (ECM) (10 A) fuse.

YES

Turn the ignition switch ON.

Measure the voltage between BLK/RED (+) terminal ⑤ and body ground.

Is there battery voltage?

NO →
Disconnect the 3P connector from the inertia switch.

Measure the voltage between BLK/YEL (+) terminal and BLK/RED (–) terminal.

Is there battery voltage?

NO →
— Replace the No. 2 ECU (ECM) (15 A) fuse in the under-dash fuse/relay box.
— Repair open in the BLK/YEL wire between the inertia switch and the No. 2 ECU (ECM) (15 A) fuse.
— Repair open in the BLK/RED wire between the PGM-FI main relay and inertia switch.

YES →
Replace the inertia switch.

YES

Measure the voltage between BLK/RED (+) terminal ⑤ and BLK or *BLK/BLU (–) terminal ②.

*: with spider system model.

Is there battery voltage?

NO →
— Repair open in BLK wire between PGM-FI main relay and G101 (located at thermostat housing).
— Repair open in BLK/BLU wire between PGM-FI main relay and spider unit (with spider system model only).
— Check the spider unit (with spider system model only).

YES

(To page 11-7)

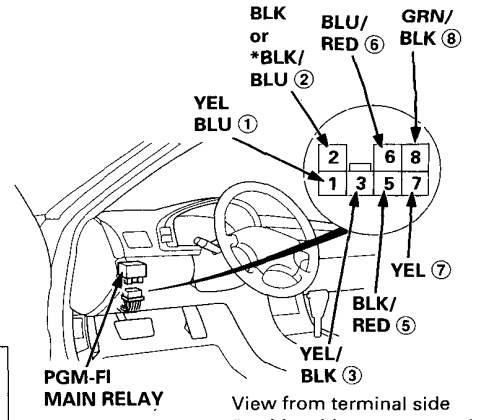

View from terminal side
*: with spider system model

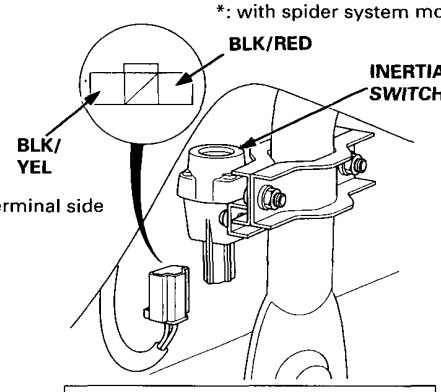

View from terminal side

(From page 11-6)

Turn the ignition switch to the START position.

NOTE: A/T: Transmission in N or P position.

Measure the voltage between BLU/RED (+) terminal ⑥ and body ground.

Is there battery voltage?

NO

- **Replace the No. 12 STARTER SIGNAL (7.5 A) fuse in the under-dash fuse/relay box.**
- **Repair open in the BLU/RED wire between the PGM-FI main relay and the No. 12 STARTER SIGNAL (7.5 A) fuse.**

YES

Turn the ignition switch OFF.

Connect the test harness between the ECM and connectors. Disconnect "A" connector from the ECM only, not the main wire harness.

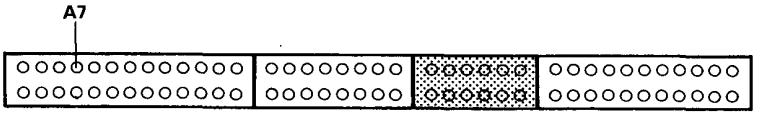

Check for continuity between GRN/BLK terminal ⑧ and A7 terminal.

Is there continuity?

NO

Repair open in GRN/BLK wire between ECM (A7) and PGM-FI main relay.

YES

Reconnect "A" connector to the ECM.

Connect the PGM-FI main relay connector.

Turn the ignition switch ON.

Measure the voltage between A23 (–) terminal and the following terminals; A25 (+), B1 (+).

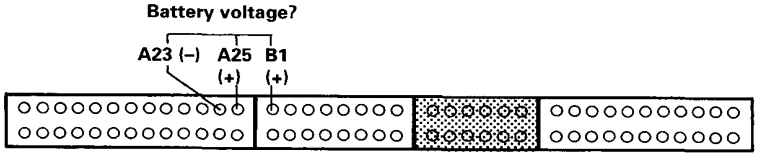

Is there battery voltage?

NO

- **Repair open in the YEL/BLK wire ③ between the ECM (A25, B1) and PGM-FI main relay.**
- **Repair open in the BLK wire between the ECM (A23) and G101 (located at thermostat housing).**
- **Replace the PGM-FI main relay.**

YES

(To page 11-8)

(cont'd)

PGM-FI Main Relay (cont'd)

(From page 11-7)

Turn the ignition switch OFF.

Measure the voltage between A7 (+) terminal and A23 (–) terminal when the ignition switch is first turned ON for two seconds.

Is there 1.0 V or less?

NO → **Substitute a known-good ECM and recheck. If prescribed voltage is now available, replace the original ECM.**

YES → **Check the PGM-FI main relay.**

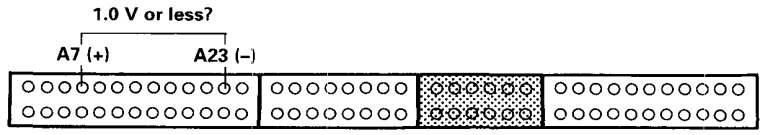

Transaxle

Manual Transmission 13-1
Automatic Transmission 14-1

Manual Transmission

Special Tools 13-2
Countershaft Assembly
Index 13-3
Reassembly 13-4
Synchro Ring, Gear
Inspection 13-6

Outline of Model Change

- The countershaft 2nd gear synchro system has been changed.

Special Tools

Ref. No.	Tool Number	Description	Qty	Page Reference
①	07746 – 0010300	Driver Attachment, 42 x 47 mm	1	13-4
②	07749 – 0010000	Handle Driver	1	13-4
③	07947 – 6890100	Seal Driver	1	13-5

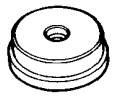

①

②

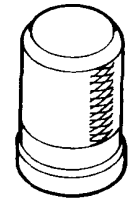

③

Countershaft Assembly

Index

Prior to reassembling, clean all the parts in solvent, dry them, and apply lubricant to any contact surfaces.

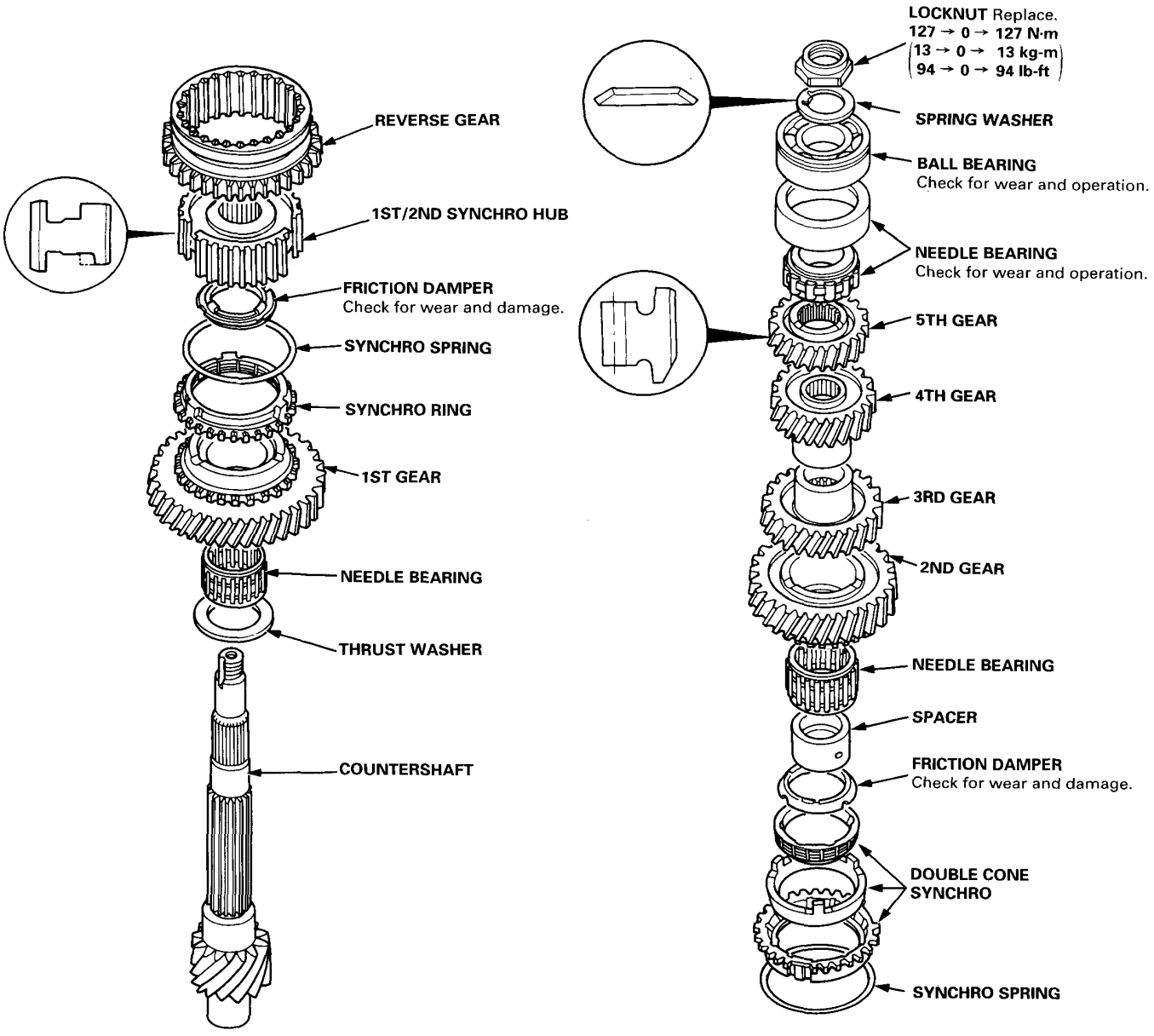

Countershaft Assembly

Reassembly

1. Install the thrust shim, needle bearing, 1st gear, friction damper, synchro ring, and synchro spring.

   NOTE: Reassemble the 1st gear and friction damper before installation.

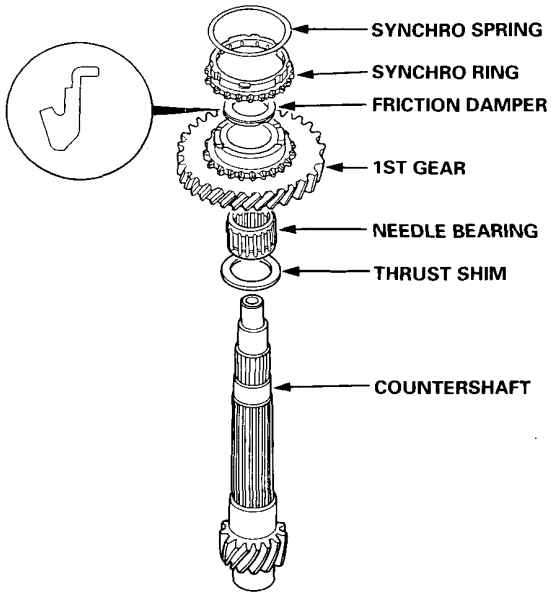

2. Install the 1st/2nd synchro hub by aligning the friction damper fingers with 1st/2nd synchro hub grooves.

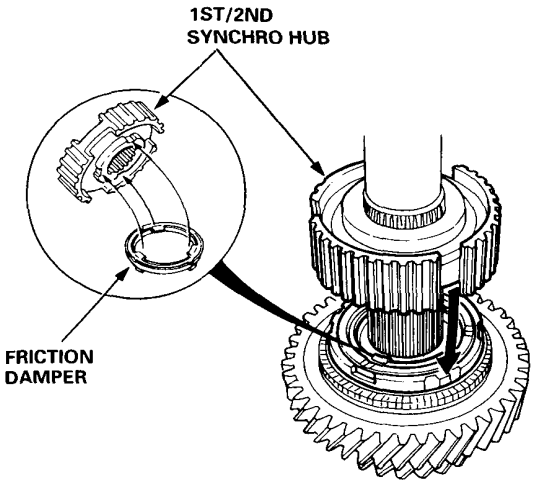

3. Install the friction damper on the spacer using the special tools and a press as shown.

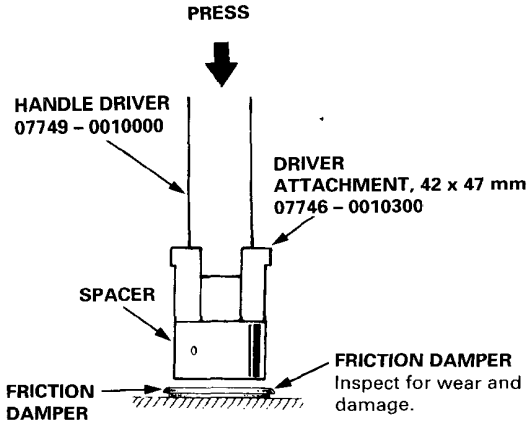

4. Install the 2nd gear by aligning the synchro cone fingers with 2nd gear grooves.

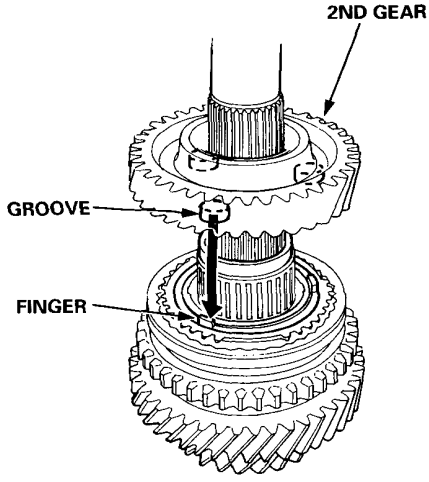

5. Install the needle bearing and the ball bearing using a special tool and a press as shown.

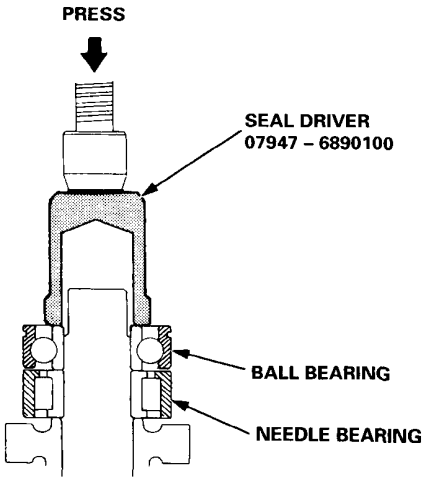

6. Securely clamp the countershaft assembly in a bench vise with wood blocks.

7. Install the spring washer.

8. Tighten the new locknut to the correct torque, then stake the locknut tab into the groove.

   Torque: 127 → 0 → 127 N·m (13 → 0 → 13 kg-m, 94 → 0 → 94 lb-ft)

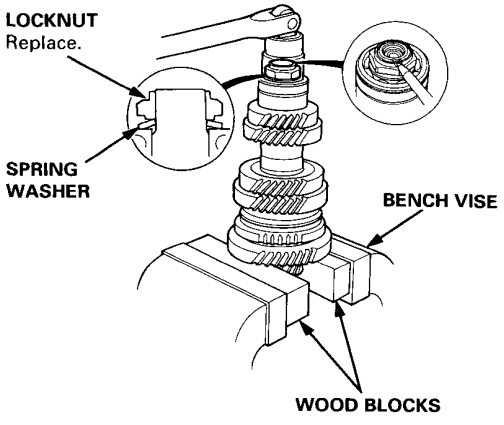

Synchro Ring, Gear

Inspection

1. Inspect the synchro ring and gear.

   A: Inspect the inside of the synchro ring for wear.

   B: Inspect the synchro sleeve teeth and matching teeth on the synchro ring for wear (rounded off).

   

   C: Inspect the synchro sleeve teeth and matching teeth on the gear for wear (rounded off).

   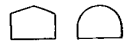

   D: Inspect the gear hub thrust surface for wear.

   E: Inspect the cone surface for wear and roughness.

   F: Inspect the teeth on all gears for uneven wear, scoring, galling, and cracks.

2. Coat the cone surface of the gear with oil, and place the synchro ring on the matching gear. Rotate the synchro ring, making sure that it does not slip.

   Measure the clearance between the synchro ring and gear all the way around.

   NOTE: Hold the synchro ring against the gear evenly while measuring the clearance.

   Synchro Ring-to-Gear Clearance
   Standard: 0.85 – 1.10 mm (0.033 – 0.043 in)
   Service Limit: 0.4 mm (0.02 in)

   Double Cone Synchro-to-Gear Clearance
   Standard:
   Ⓐ: (Outer Synchro Ring to Synchro Cone) 0.5 mm (0.02 in) MIN
   Ⓑ: (Synchro Cone to Gear) 0.5 mm (0.02 in) MIN
   Ⓒ: (Outer Synchro Ring to Gear) 0.95 – 1.68 mm (0.037 – 0.066 in)
   Service Limit:
   Ⓐ: 0.3 mm (0.01 in)
   Ⓑ: 0.3 mm (0.01 in)
   Ⓒ: 0.6 mm (0.02 in)

   If the clearance is less than the service limit, replace the synchro ring and synchro cone.

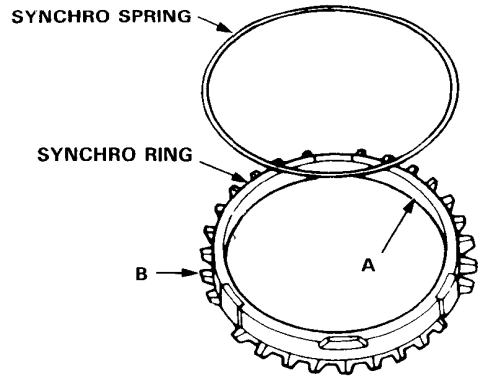

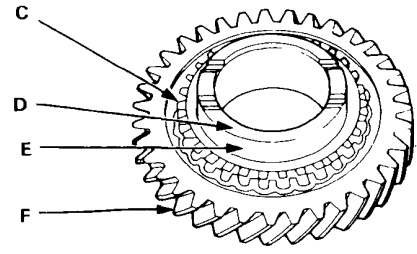

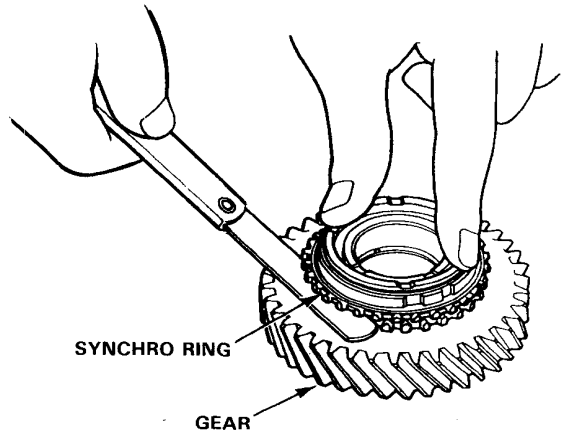

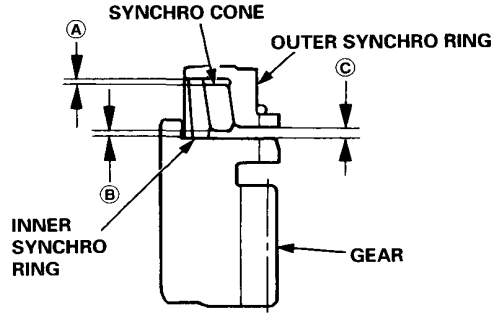

Automatic Transmission

Special Tools 14-2
Circuit Diagram 14-4
Illustrated Index
  Right Side Cover 14-6
  Transmission Housing 14-8
  Torque Converter Housing 14-10
Right Side Cover
  Removal 14-12
Main Valve Body
  Disassembly/Inspection/
    Reassembly 14-14
Secondary Shaft
  Disassembly/Inspection/
    Reassembly 14-16
  Inspection 14-17
Clutch
  Illustrated Index 14-18
Transmission
  Reassembly 14-22
Throttle Control Cable
  Inspection 14-30
  Adjustment 14-32

Outline of Model Changes

- Circuit diagram has been modified.
- The following items of the transmission have been changed.
  - Reverse idler gear shaft and holder
  - Main valve body assembly
  - Secondary shaft assembly
  - Clutch discs and pistons
- Right side cover protector has been discontinued.
- Magnet on the ATF strainer has been discontinued.
- Throttle control cable inspection and adjustment have been changed.

Special Tools

Ref. No	Tool Number	Description	Qty	Page Reference
①	07PAB—0010000 or 07GAB—PF50101	Mainshaft Holder Set	1	14-12, 26
②	07HAF—PK40100	Gear Installer	1	14-28

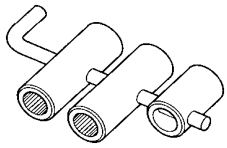

①

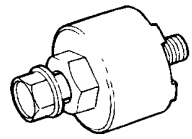

②

Circuit Diagram

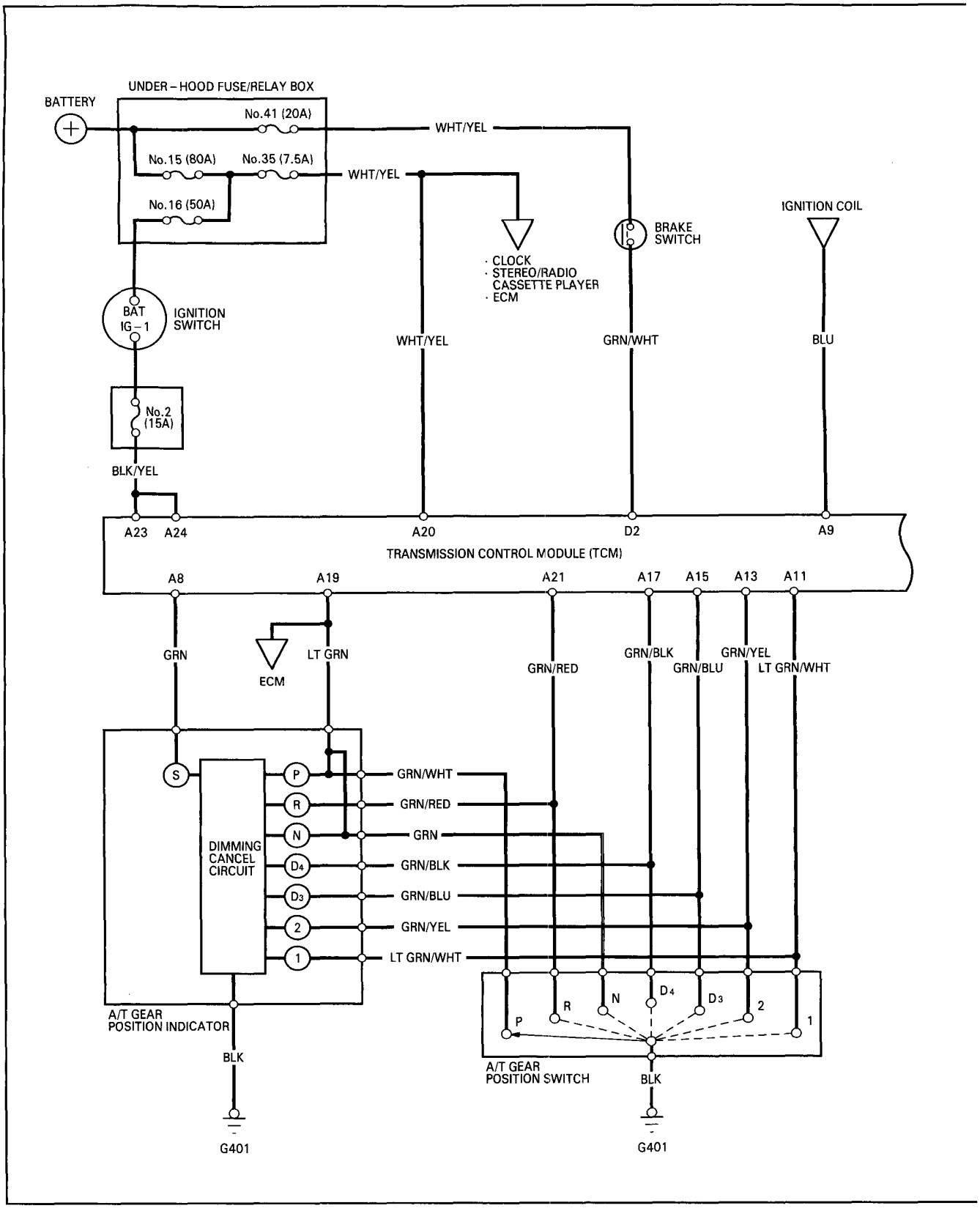

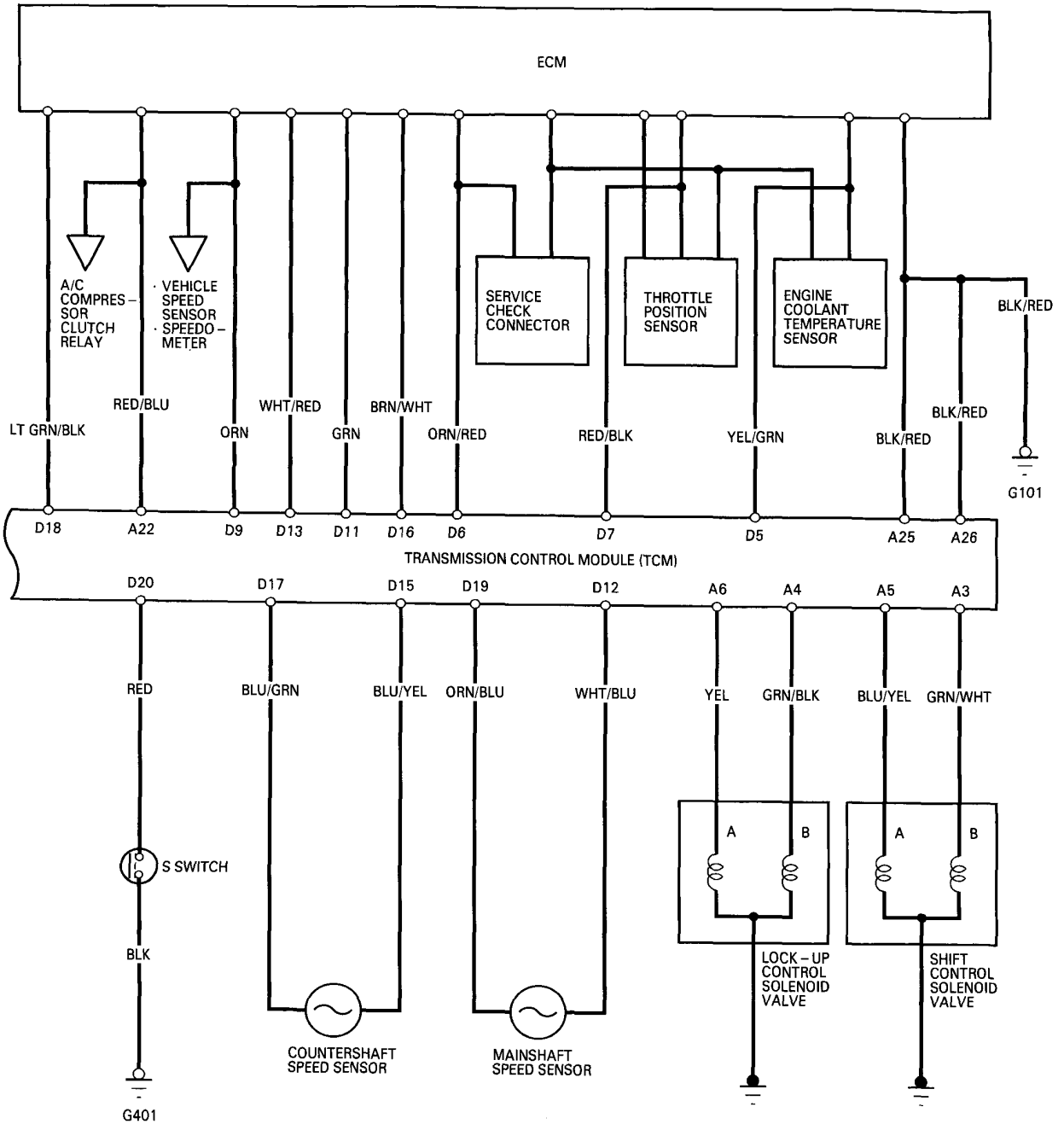

	A3	A5		A9	A11	A13	A15	A17	A19	A21	A23	A25
	A4	A6	A8						A20	A22	A24	A26

		D5	D7	D9	D11	D13	D15	D17	D19	
D2		D6			D12		D16		D20	

TCM Terminal Location

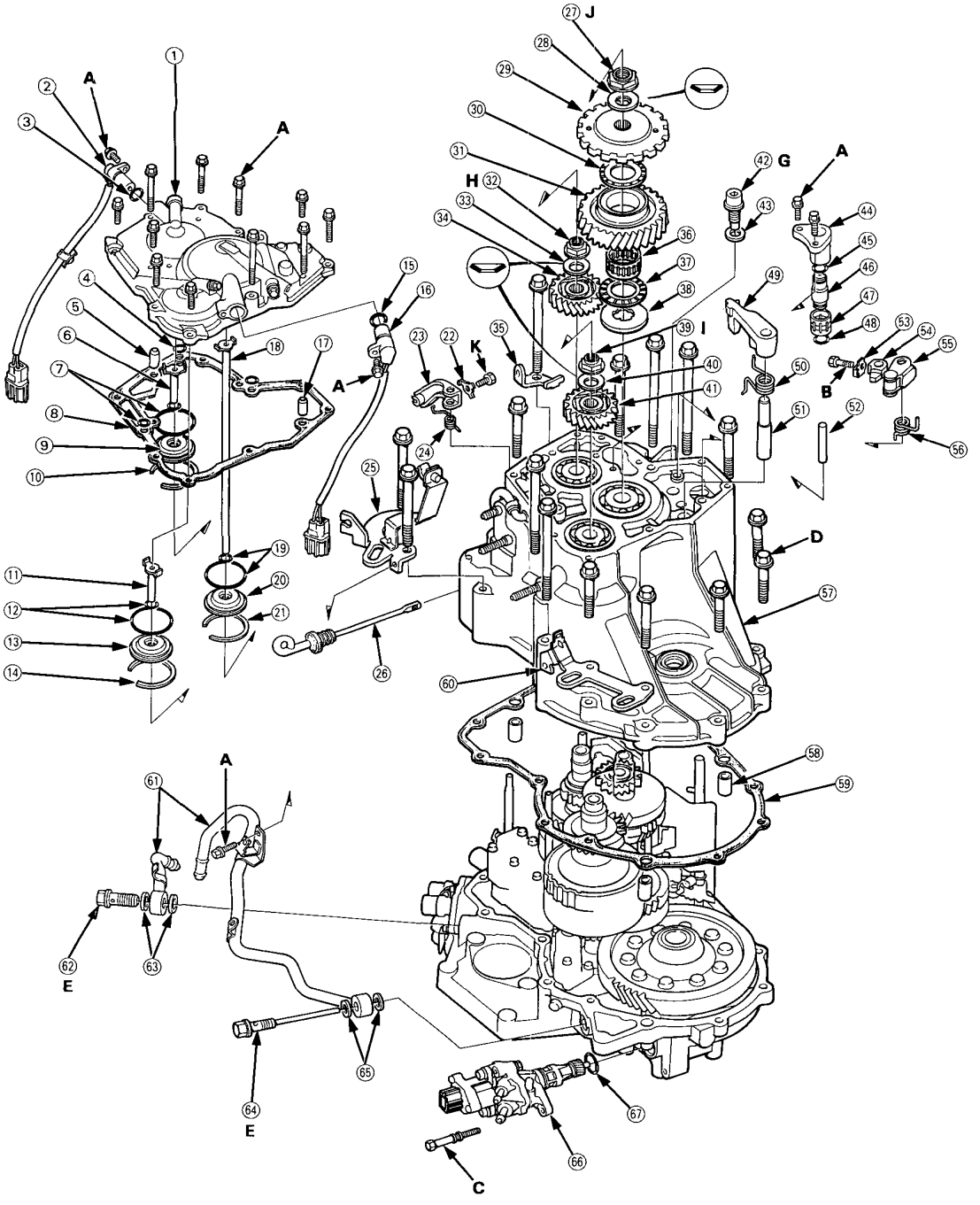
1
2
3
4
5
6
7
8
9
10
11
12
13
14
15
16
17
18
19
20
21
22
23
24
25
26
27
28
29
30
31
32
33
34
35
36
37
38
39
40
41
42
43
44
45
46
47
48
49
50
51
52
53
54
55
56
57
58
59
60
61
62
63
64
65
66
67
A
B
C
D
E
G
H
I
J
K

①RIGHT SIDE COVER
②MAINSHAFT (NM) SPEED SENSOR
③O-RING Replace.
④O-RING Replace.
⑤DOWEL PIN
⑥4TH CLUTCH FEED PIPE
⑦O-RINGS Replace.
⑧RIGHT SIDE COVER GASKET Replace.
⑨FEED PIPE GUIDE
⑩SNAP RING
⑪1ST CLUTCH FEED PIPE
⑫O-RINGS Replace.
⑬FEED PIPE GUIDE
⑭SNAP RING
⑮O-RING Replace.
⑯COUNTERSHAFT (NC) SPEED SENSOR
⑰DOWEL PIN
⑱1ST-HOLD CLUTCH FEED PIPE
⑲O-RINGS Replace.
⑳FEED PIPE GUIDE
㉑SNAP RING
㉒LOCK WASHER Replace.
㉓THROTTLE CONTROL LEVER
㉔THROTTLE CONTROL LEVER SPRING
㉕THROTTLE CONTROL CABLE STAY/ TRANSMISSION HANGER
㉖ATF LEVEL GAUGE
㉗COUNTERSHAFT LOCKNUT, 24 x 1.25 mm (Flange nut) Replace.
㉘CONICAL SPRING WASHER Replace.
㉙PARKING GEAR
㉚THRUST NEEDLE BEARING
㉛COUNTERSHAFT IDLER GEAR
㉜MAINSHAFT LOCKNUT, 24 x 1.25 mm (Flange nut) Replace.
㉝CONICAL SPRING WASHER Replace.
㉞MAINSHAFT IDLER GEAR
㉟HARNESS STAY
㊱NEEDLE BEARING
㊲THRUST NEEDLE BEARING
㊳THRUST WASHER
㊴SECONDARY SHAFT LOCKNUT, 24 x 1.25 mm (Flange nut) Replace.
㊵CONICAL SPRING WASHER Replace.
㊶SECONDARY SHAFT IDLER GEAR
㊷DRAIN PLUG
㊸SEALING WASHER Replace.
㊹REVERSE IDLER GEAR SHAFT HOLDER
㊺O-RING Replace.
㊻REVERSE IDLER GEAR SHAFT
㊼NEEDLE BEARING
㊽O-RING Replace.
㊾PARKING BRAKE PAWL
㊿PARKING BRAKE PAWL SPRING
51 PARKING BRAKE PAWL SHAFT
52 PARKING BRAKE PAWL STOPPER
53 LOCK WASHER Replace.
54 PARKING BRAKE STOPPER Selective part
55 PARKING BRAKE LEVER
56 PARKING BRAKE LEVER SPRING
57 TRANSMISSION HOUSING
58 DOWEL PIN
59 TRANSMISSION HOUSING GASKET Replace.
60 TRANSMISSION HANGER
61 ATF COOLER PIPES
62 JOINT BOLT
63 SEALING WASHERS Replace.
64 JOINT BOLT
65 SEALING WASHERS Replace.
66 VEHICLE SPEED SENSOR/POWER STEERING SPEED SENSOR
67 O-RING Replace.

TORQUE SPECIFICATIONS

Ref No.	Torque Value	Bolt Size	Remarks
A	12 N·m (1.2 kg-m, 9 lb-ft)	6 x 1.0 mm	
B	14 N·m (1.4 kg-m, 10 lb-ft)	6 x 1.0 mm	
C	18 N·m (1.8 kg-m, 13 lb-ft)	8 x 1.25 mm	
D	55 N·m (5.5 kg-m, 40 lb-ft)	10 x 1.25 mm	
E	29 N·m (2.9 kg-m, 21 lb-ft)	12 x 1.25 mm	Joint Bolt
G	50 N·m (5.0 kg-m, 36 lb-ft)	18 x 1.5 mm	Drain Plug
H	230 N·m (23.0 kg-m, 166 lb-ft) → 0 → 170 N·m (17.0 kg-m, 123 lb-ft)	24 x 1.25 mm	Mainshaft Locknut Left-hand threads
I	230 N·m (23.0 kg-m, 166 lb-ft) → 0 → 170 N·m (17.0 kg-m, 123 lb-ft)	24 x 1.25 mm	Secondary Shaft Locknut
J	230 N·m (23.0 kg-m, 166 lb-ft) → 0 → 170 N·m (17.0 kg-m, 123 lb-ft)	24 x 1.25 mm	Countershaft Locknut
K	8 N·m (0.8 kg-m, 5.8 lb-ft)	5 x 0.8 mm	

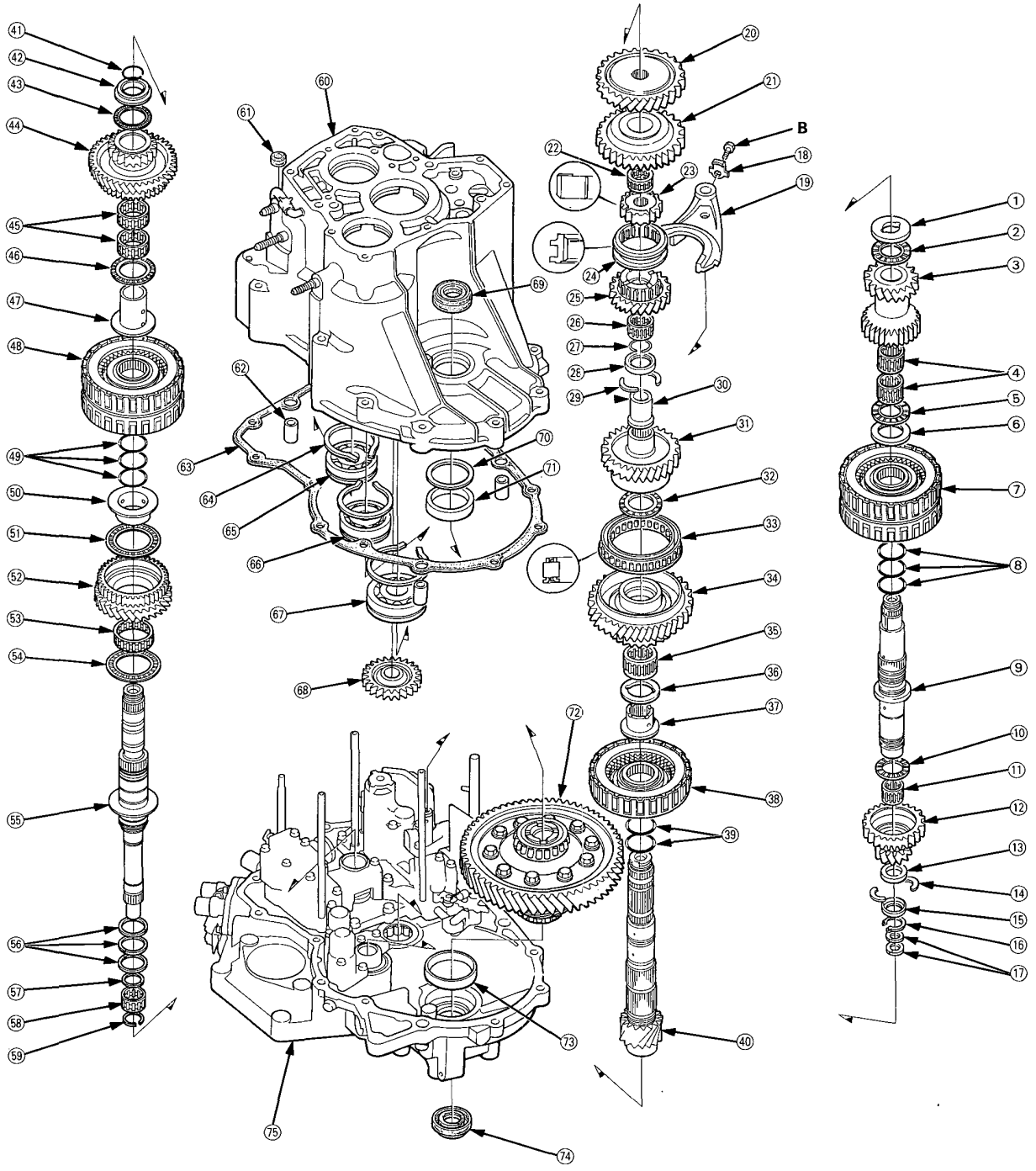
41
42
43
44
45
46
47
48
49
50
51
52
53
54
55
56
57
58
59
60
61
62
63
64
65
66
67
68
69
70
71
72
73
74
75
20
21
B
22
23
18
19
24
25
26
27
28
29
30
31
32
33
34
35
36
37
38
39
40
1
2
3
4
5
6
7
8
9
10
11
12
13
14
15
16
17

① **THRUST WASHER**
② **THRUST NEEDLE BEARING**
③ **SECONDARY SHAFT 2ND GEAR**
④ **NEEDLE BEARINGS**
⑤ **THRUST NEEDLE BEARING**
⑥ **SPLINED WASHER** Selective part
⑦ **1ST/2ND CLUTCH ASSEMBLY**
⑧ **O-RINGS** Replace.
⑨ **SECONDARY SHAFT**
⑩ **THRUST NEEDLE BEARING**
⑪ **NEEDLE BEARING**
⑫ **SECONDARY SHAFT 1ST GEAR**
⑬ **DISTANCE COLLAR, 5.0 mm**
⑭ **COTTERS, 29 mm**
⑮ **COTTER RETAINER**
⑯ **SNAP RING**
⑰ **SEALING RINGS, 32 mm**
⑱ **LOCK WASHER** Replace.
⑲ **SHIFT FORK**
⑳ **COUNTERSHAFT 2ND GEAR**
㉑ **COUNTERSHAFT REVERSE GEAR**
㉒ **NEEDLE BEARING**
㉓ **REVERSE SELECTOR HUB**
㉔ **REVERSE SELECTOR**
㉕ **COUNTERSHAFT 4TH GEAR**
㉖ **NEEDLE BEARING**
㉗ **SNAP RING**
㉘ **COLLAR, 32 mm**
㉙ **COTTERS, 29 mm**
㉚ **DISTANCE COLLAR**
㉛ **COUNTERSHAFT 3RD GEAR**
㉜ **THRUST NEEDLE BEARING**
㉝ **ONE-WAY CLUTCH**
㉞ **COUNTERSHAFT 1ST GEAR**
㉟ **NEEDLE BEARING**
㊱ **THRUST WASHER**
㊲ **COUNTERSHAFT 1ST GEAR COLLAR**
㊳ **1ST-HOLD CLUTCH ASSEMBLY**
㊴ **O-RINGS** Replace.
㊵ **COUNTERSHAFT**
㊶ **SNAP RING**
㊷ **COLLAR**
㊸ **THRUST NEEDLE BEARING**
㊹ **MAINSHAFT 4TH/REVERSE GEAR**
㊺ **NEEDLE BEARINGS**
㊻ **THRUST NEEDLE BEARING**
㊼ **4TH GEAR COLLAR**
㊽ **3RD/4TH CLUTCH ASSEMBLY**
㊾ **O-RINGS** Replace.
㊿ **3RD GEAR COLLAR**
(51) **THRUST NEEDLE BEARING**
(52) **MAINSHAFT 3RD GEAR**
(53) **NEEDLE BEARING**
(54) **THRUST NEEDLE BEARING**
(55) **MAINSHAFT**
(56) **SEALING RINGS, 35 mm**
(57) **SEALING RING, 29 mm**
(58) **NEEDLE BEARING**
(59) **SET RING**
(60) **TRANSMISSION HOUSING**
(61) **OIL SEAL** Replace.
(62) **DOWEL PIN**
(63) **TRANSMISSION HOUSING GASKET** Replace.
(64) **SNAP RING**
(65) **TRANSMISSION HOUSING MAINSHAFT BEARING**
(66) **TRANSMISSION HOUSING SECONDARY SHAFT BEARING**
(67) **TRANSMISSION HOUSING COUNTERSHAFT BEARING**
(68) **REVERSE IDLER GEAR**
(69) **TRANSMISSION HOUSING OIL SEAL** Replace.
(70) **THRUST SHIM** Selective part
(71) **BEARING OUTER RACE**
(72) **DIFFERENTIAL ASSEMBLY**
(73) **BEARING OUTER RACE**
(74) **TORQUE CONVERTER HOUSING OIL SEAL** Replace.
(75) **TORQUE CONVERTER HOUSING**

TORQUE SPECIFICATIONS

Ref No.	Torque Value	Bolt Size	Remarks
B	14 N•m (1.4 kg-m, 10 lb-ft)	6 x 1.0 mm	

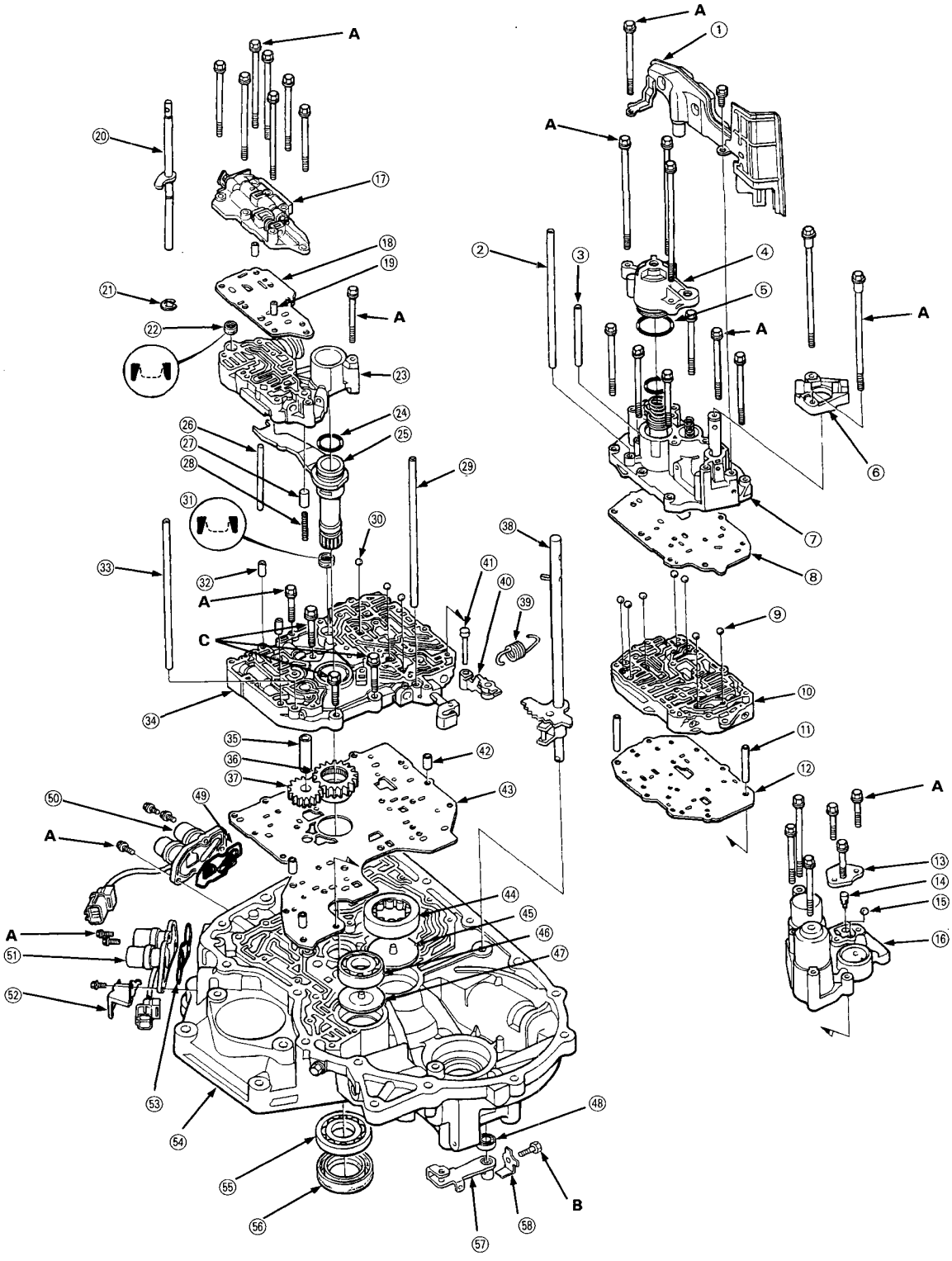
A
1
2
3
4
5
6
7
8
9
10
11
12
13
14
15
16
17
18
19
20
21
22
23
24
25
26
27
28
29
30
31
32
33
34
35
36
37
38
39
40
41
42
43
44
45
46
47
48
49
50
51
52
53
54
55
56
57
58
B
C

① **ATF STRAINER**
② **OIL FEED PIPE**
③ **OIL FEED PIPE**
④ **4TH ACCUMULATOR COVER**
⑤ **O-RING** Replace.
⑥ **SERVO DETENT BASE**
⑦ **SERVO BODY**
⑧ **SERVO SEPARATOR PLATE**
⑨ **CHECK BALL**
⑩ **SECONDARY VALVE BODY**
⑪ **DOWEL PIN**
⑫ **SECONDARY SEPARATOR PLATE**
⑬ **ACCUMULATOR BODY COVER**
⑭ **1ST ACCUMULATOR CHOKE**
⑮ **CHECK BALL**
⑯ **1ST/2ND ACCUMULATOR BODY**
⑰ **THROTTLE VALVE BODY**
⑱ **THROTTLE SEPARATOR PLATE**
⑲ **DOWEL PIN**
⑳ **THROTTLE CONTROL SHAFT**
㉑ **E-RING** Replace.
㉒ **FILTER** Replace.
㉓ **REGULATOR VALVE BODY**
㉔ **O-RING** Replace.
㉕ **STATOR SHAFT**
㉖ **STOPPER SHAFT**
㉗ **TORQUE CONVERTER CHECK VALVE**
㉘ **TORQUE CONVERTER CHECK VALVE SPRING**
㉙ **OIL FEED PIPE**
㉚ **CHECK BALL**
㉛ **FILTER** Replace.
㉜ **DOWEL PIN**
㉝ **OIL FEED PIPE**
㉞ **MAIN VALVE BODY**
㉟ **OIL PUMP DRIVEN GEAR SHAFT**
㊱ **OIL PUMP DRIVE GEAR**
㊲ **OIL PUMP DRIVEN GEAR**
㊳ **CONTROL SHAFT**
㊴ **DETENT SPRING**
㊵ **DETENT ARM**
㊶ **DETENT ARM SHAFT**
㊷ **DOWEL PIN**
㊸ **MAIN SEPARATOR PLATE**
㊹ **COUNTERSHAFT ROLLER BEARING**
㊺ **OIL GUIDE PLATE**
㊻ **SECONDARY SHAFT BALL BEARING**
㊼ **OIL GUIDE PLATE**
㊽ **OIL SEAL** Replace.
㊾ **SHIFT CONTROL SOLENOID FILTER/GASKET** Replace.
㊿ **SHIFT CONTROL SOLENOID VALVE ASSEMBLY**
(51) **LOCK-UP CONTROL SOLENOID VALVE ASSEMBLY**
(52) **CONNECTOR HOLDER**
(53) **LOCK-UP CONTROL SOLENOID FILTER/GASKET** Replace.
(54) **TORQUE CONVERTER HOUSING**
(55) **MAINSHAFT BALL BEARING**
(56) **OIL SEAL** Replace.
(57) **CONTROL LEVER**
(58) **LOCK WASHER** Replace.

TORQUE SPECIFICATIONS

Ref No.	Torque Value	Bolt Size	Remarks
A	12 N•m (1.2 kg-m, 9 lb-ft)	6 x 1.0 mm	
B	14 N•m (1.4 kg-m, 10 lb-ft)	6 x 1.0 mm	
C	18 N•m (1.8 kg-m, 13 lb-ft)	8 x 1.25 mm	

Right Side Cover

Removal

NOTE:
- Clean all parts thoroughly in solvent or carburetor cleaner and dry with compressed air.
- Blow out all passages.
- When removing the transmission right side cover, replace the following:
  - Right side cover gasket
  - Lock washers
  - Transmission housing gasket
  - O-rings
  - Each shaft locknut and conical spring washer
  - Sealing washers

1. Remove the eleven bolts securing the right side cover, then remove the right side cover.
2. Slip the special tool onto the mainshaft.

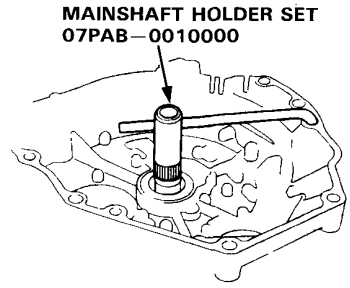

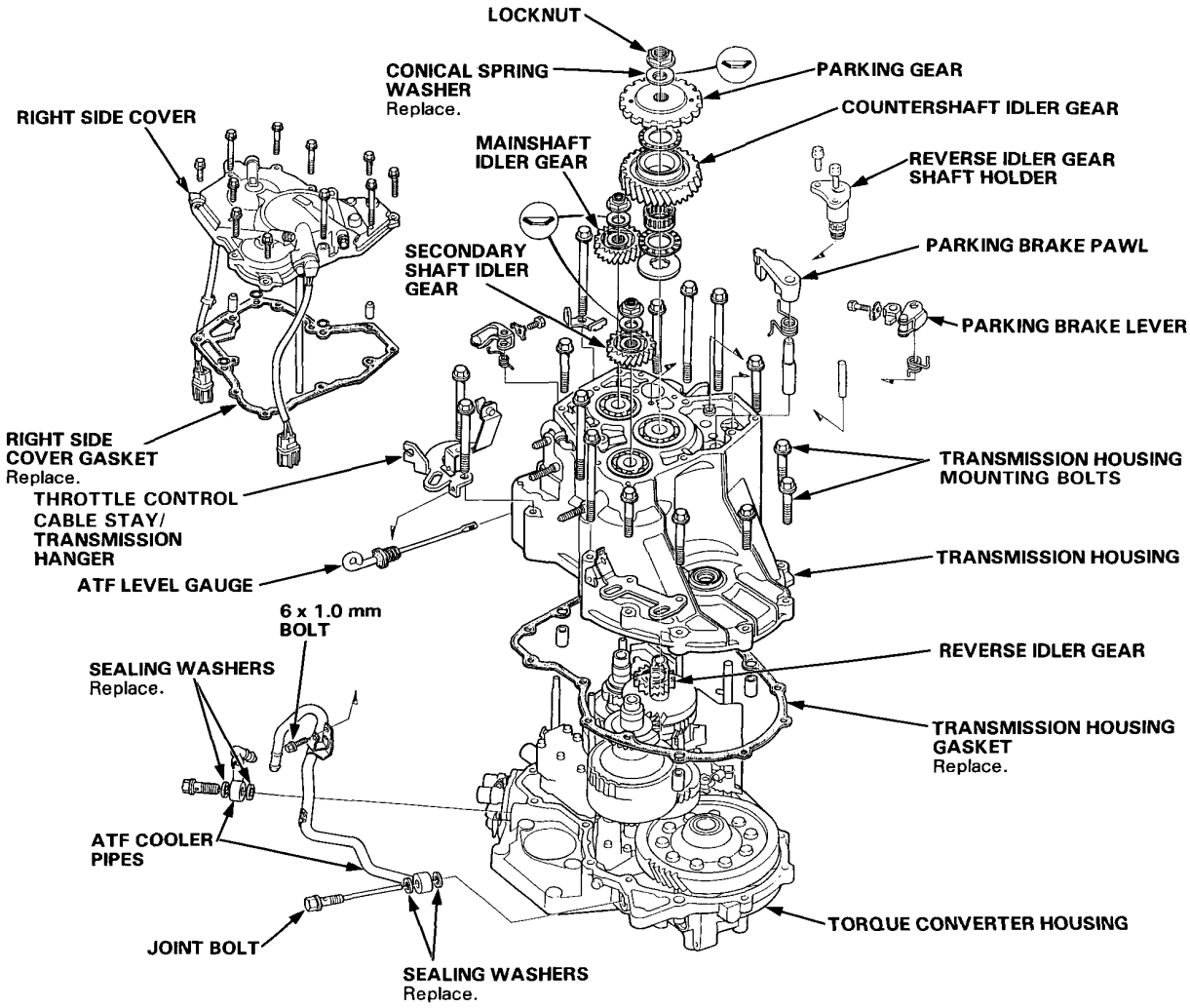

3. Engage the parking brake pawl with the parking gear.

4. Cut the lock tabs of each shaft locknut using a chisel as shown. Then remove the locknuts and conical spring washers from each shaft.

   NOTE:
   - Mainshaft locknut has left-hand threads.
   - Clean the old locknuts; they are used to install the press fit idler gears on the mainshaft and secondary shaft and the parking gear on the countershaft.
   - Always wear safety glasses.

   CAUTION:
   Keep all of the chiseled particles out of the transmission.

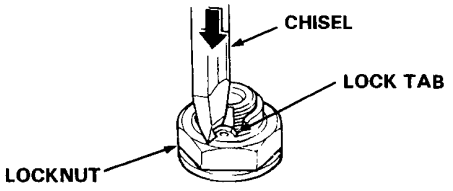

5. Remove the special tool from the mainshaft after removing the locknuts.

6. Remove the parking gear using a puller from the countershaft as shown. Then remove the idler gears from the mainshaft and secondary shaft using a puller.

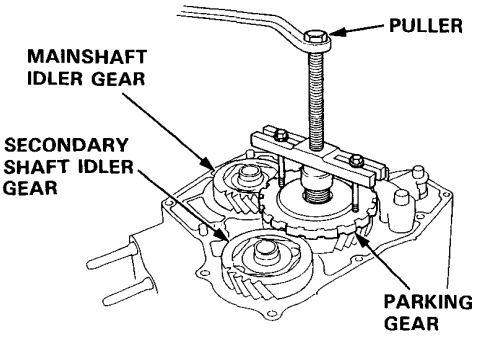

7. Remove the countershaft idler gear, needle bearing, thrust needle bearing, and thrust washer from the countershaft.

8. Remove the parking brake pawl, spring, shaft, and stopper from the housing.

9. Remove the throttle control lever and spring from the throttle control shaft.

10. Remove the ATF cooler pipe mounting bolt from the transmission hanger.

11. Remove the transmission housing mounting bolts.

12. Remove the reverse idler gear shaft and reverse idler gear shaft holder using a 5 x 0.8 mm bolt as shown.

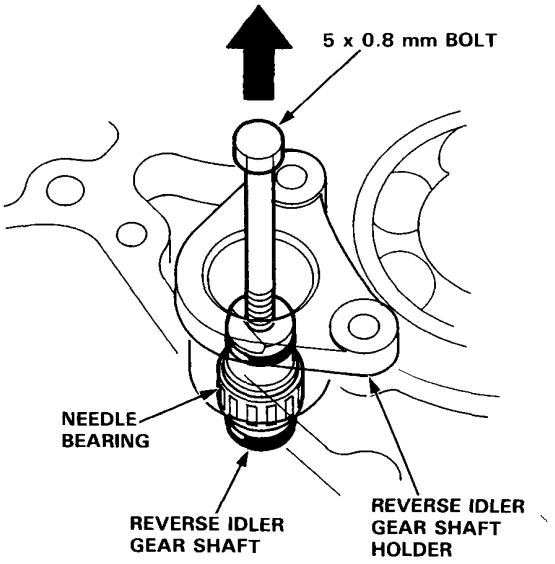

13. Move the reverse idler gear to disengage it from the countershaft and mainshaft reverse gears as shown.

    NOTE:
    The transmission housing will not separate from the torque converter housing if the reverse idler gear is not removed.

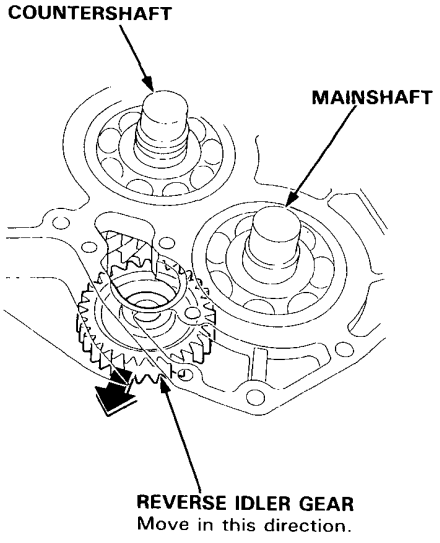

Main Valve Body

Disassembly/Inspection/Reassembly

NOTE:
- Clean all parts thoroughly in solvent or carburetor cleaner, and dry with compressed air. Blow out all passages.
- Replace valve body as an assembly if any parts are worn or damaged.
- Check all valves for free movement. If any fail to slide freely, see Valve Body Repair.

CAUTION:
Do not use a magnet to remove the check balls; it may magnetize the balls.

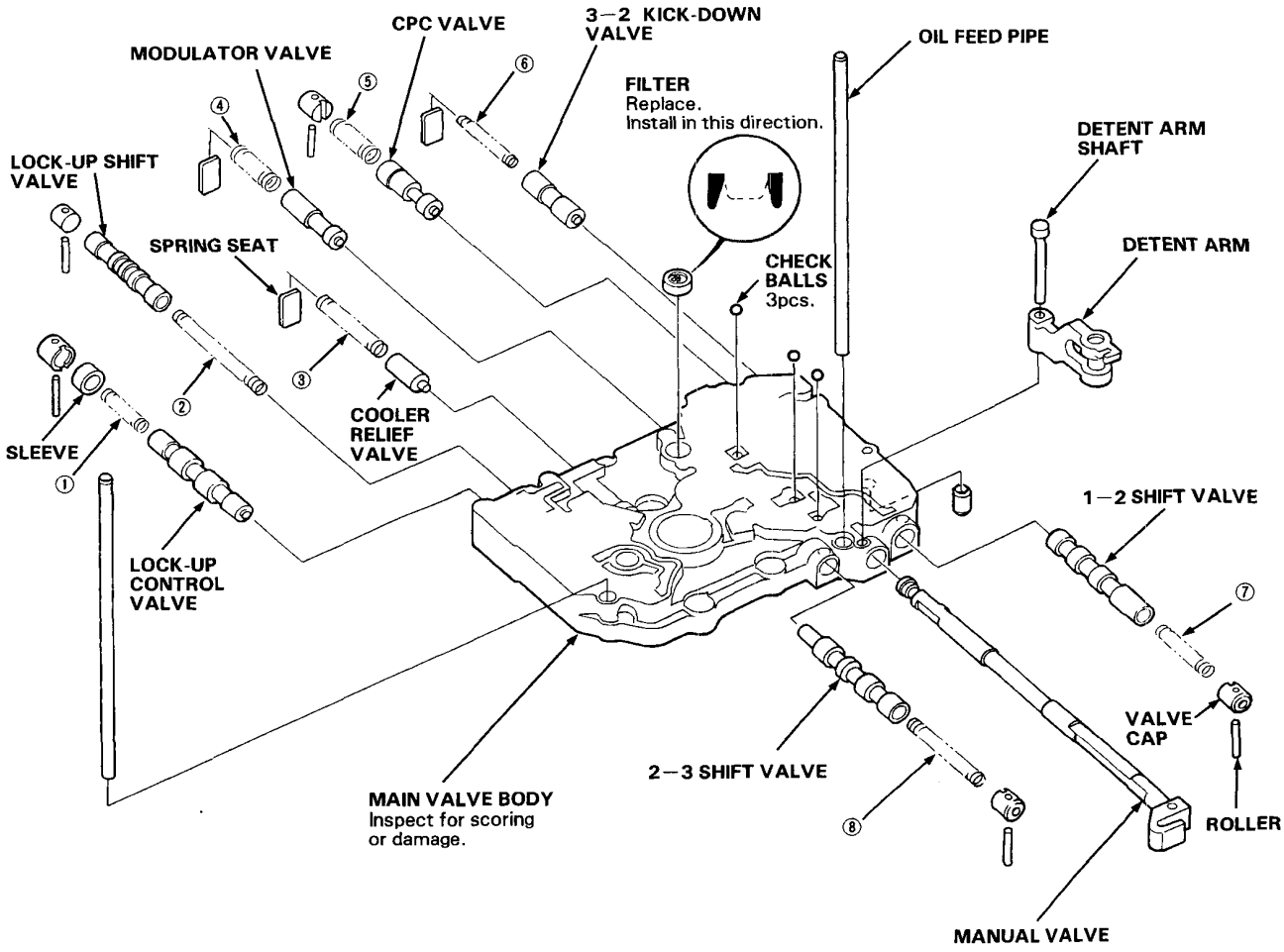

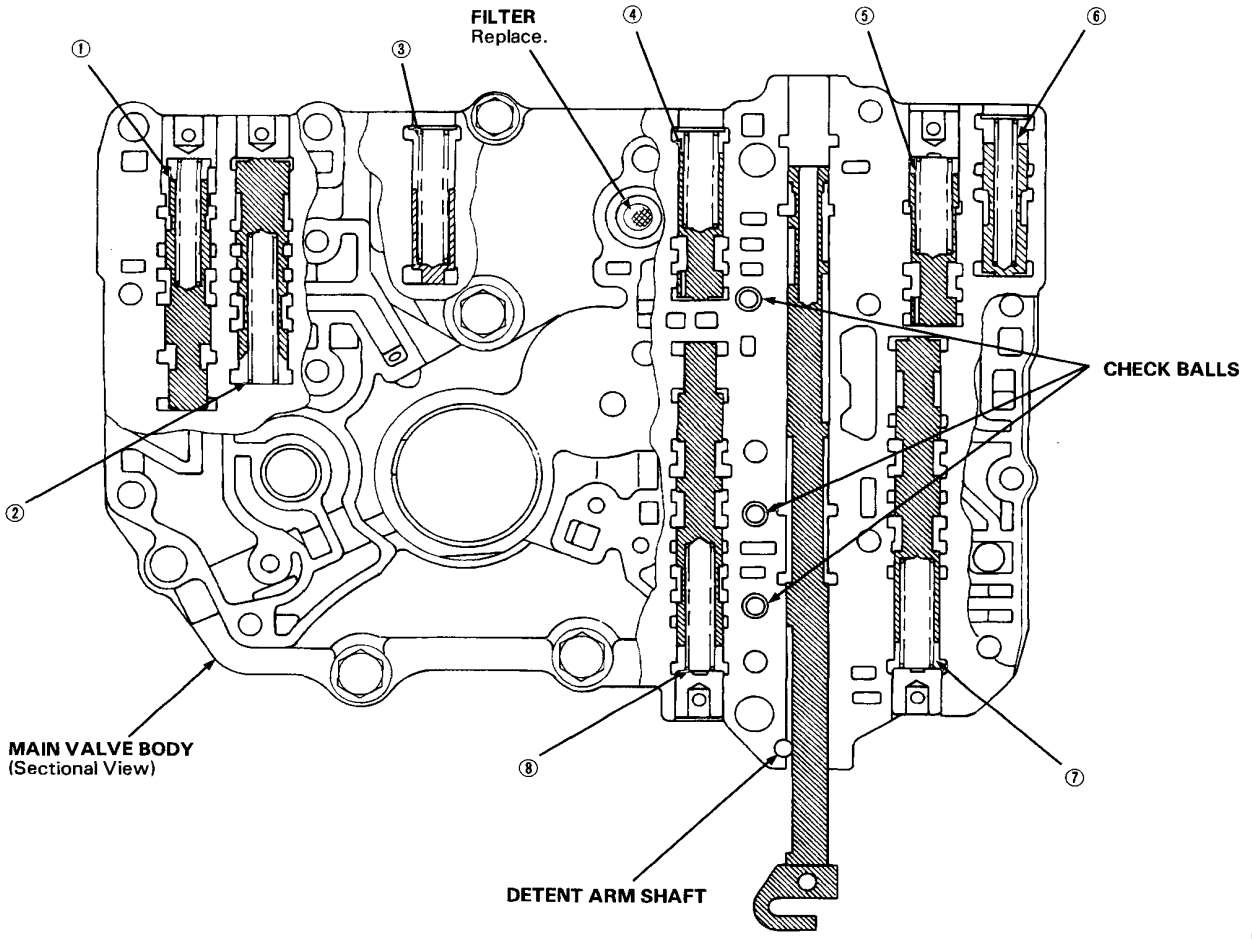

SPRING SPECIFICATIONS

Unit: mm (in)

No.	Spring	Standard (New)			
		Wire Dia.	O.D.	Free Length	No. of Coils
①	Lock-up control valve spring	0.70 (0.028)	6.60 (0.260)	38.00 (1.496)	14.1
②	Lock-up shift valve spring	0.90 (0.035)	7.60 (0.299)	73.70 (2.902)	32.0
③	Cooler relief valve spring	1.10 (0.043)	8.40 (0.331)	46.80 (1.843)	17.0
④	Modulator valve spring	1.40 (0.055)	9.40 (0.370)	33.00 (1.299)	10.5
⑤	CPC valve spring	1.40 (0.055)	9.40 (0.370)	33.00 (1.299)	10.5
⑥	3−2 kick-down valve spring	1.20 (0.047)	7.10 (0.280)	46.90 (1.846)	20.6
⑦	1−2 shift valve spring	1.00 (0.039)	8.60 (0.339)	41.30 (1.626)	16.9
⑧	2−3 shift valve spring	0.90 (0.035)	7.60 (0.299)	57.00 (2.244)	26.8

Secondary Shaft

Disassembly/Inspection/Reassembly

NOTE:
- Lubricate all parts with ATF during reassembly.
- Install the thrust needle bearings with unrolled edge of bearing retainer facing washer.
- Inspect thrust needle and needle bearings for galling and rough movement.
- Before installing the O-rings, wrap the shaft splines with tape to prevent damage to the O-rings.

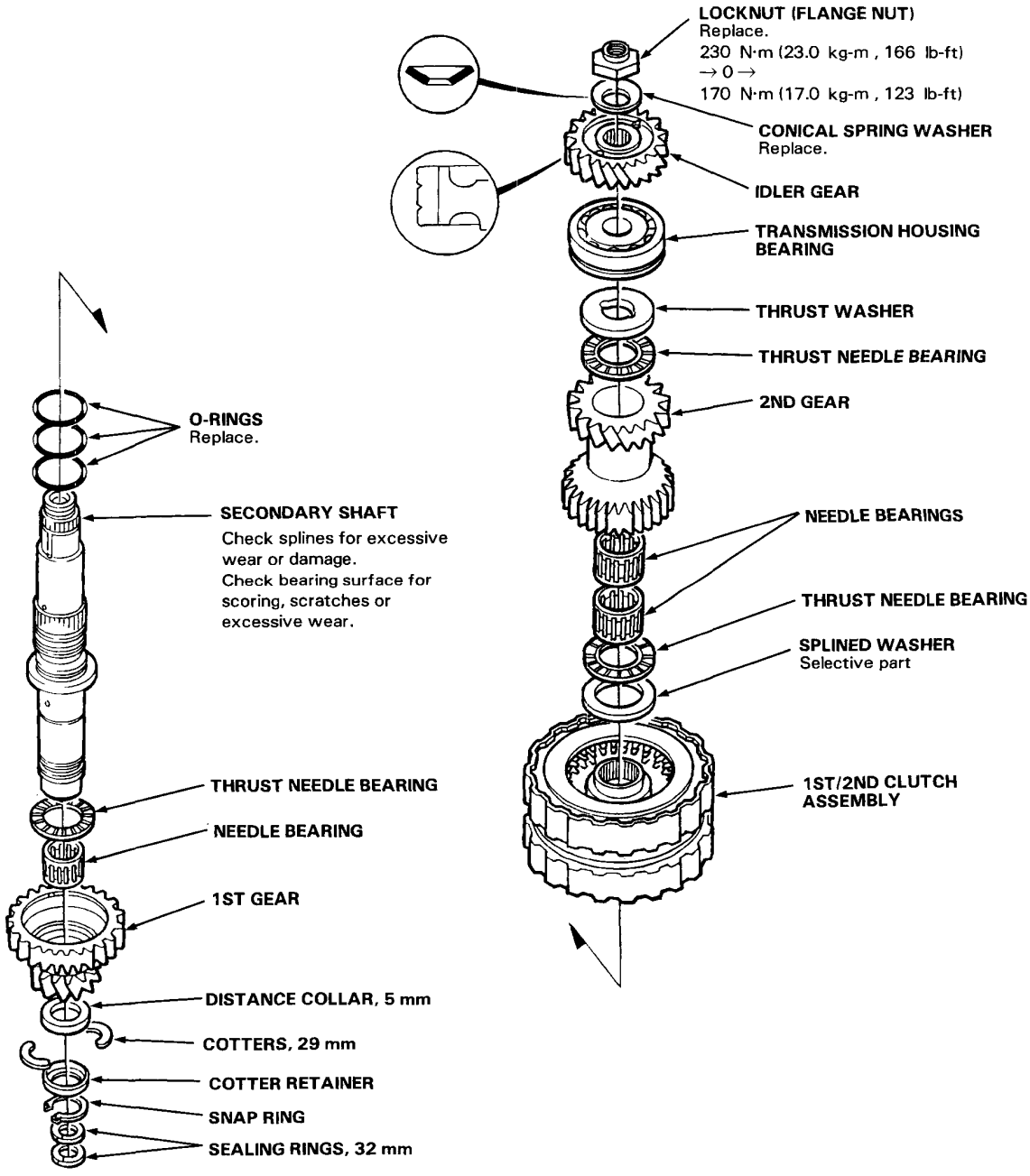

Inspection

- Clearance Measurement

NOTE: Lubricate all parts with ATF during assembly.

1. Remove the secondary shaft bearing from the transmission housing.

2. Assemble the secondary shaft assembly without O-rings.

3. Install the secondary shaft bearing on the secondary shaft.

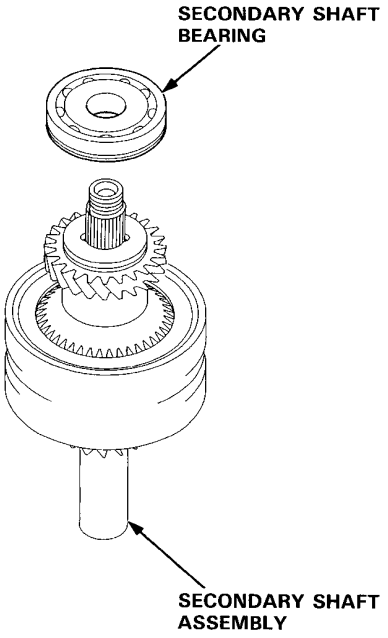

4. Set the dial indicator to the 2nd gear as shown.

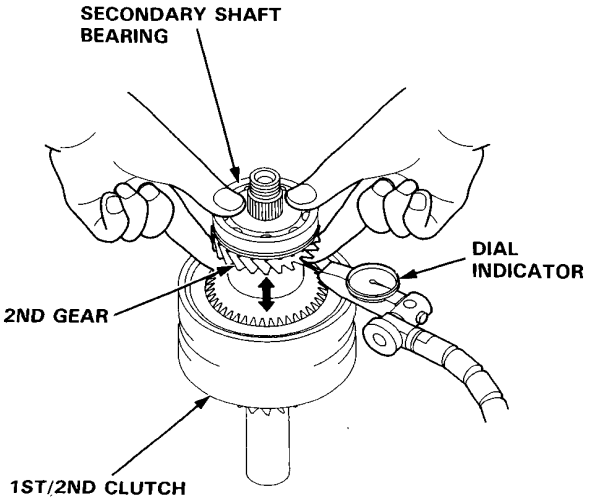

5. Hold the secondary shaft bearing against the 1st/2nd clutch assembly. Measure the 2nd gear axial clearance while moving the 2nd gear.

   STANDARD: 0.07–0.15 mm (0.003–0.006 in)

   NOTE: Take measurements in at least three places, and use the average as the actual clearance.

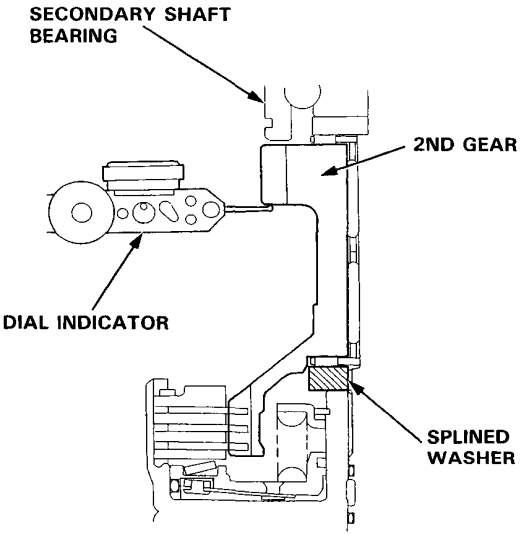

6. If the clearance is out of tolerance, remove the splined washer and measure its thickness.

7. Select and install a new splined washer then recheck.

SPLINED WASHER

No.	Part Number	Thickness
1	90406–PX4–700	4.05 mm (0.159 in)
2	90407–PX4–700	4.10 mm (0.161 in)
3	90408–PX4–700	4.15 mm (0.163 in)
4	90409–PX4–700	4.20 mm (0.165 in)
5	90410–PX4–700	4.25 mm (0.167 in)
6	90411–PX4–700	4.30 mm (0.169 in)
7	90412–PX4–700	4.35 mm (0.171 in)
8	90413–PX4–700	4.40 mm (0.173 in)
9	90414–PX4–700	4.45 mm (0.175 in)

8. After replacing the splined washer, make sure that the clearance is within tolerance.

Illustrated Index

1ST/2ND CLUTCH ASSEMBLY: H23A3 Engine

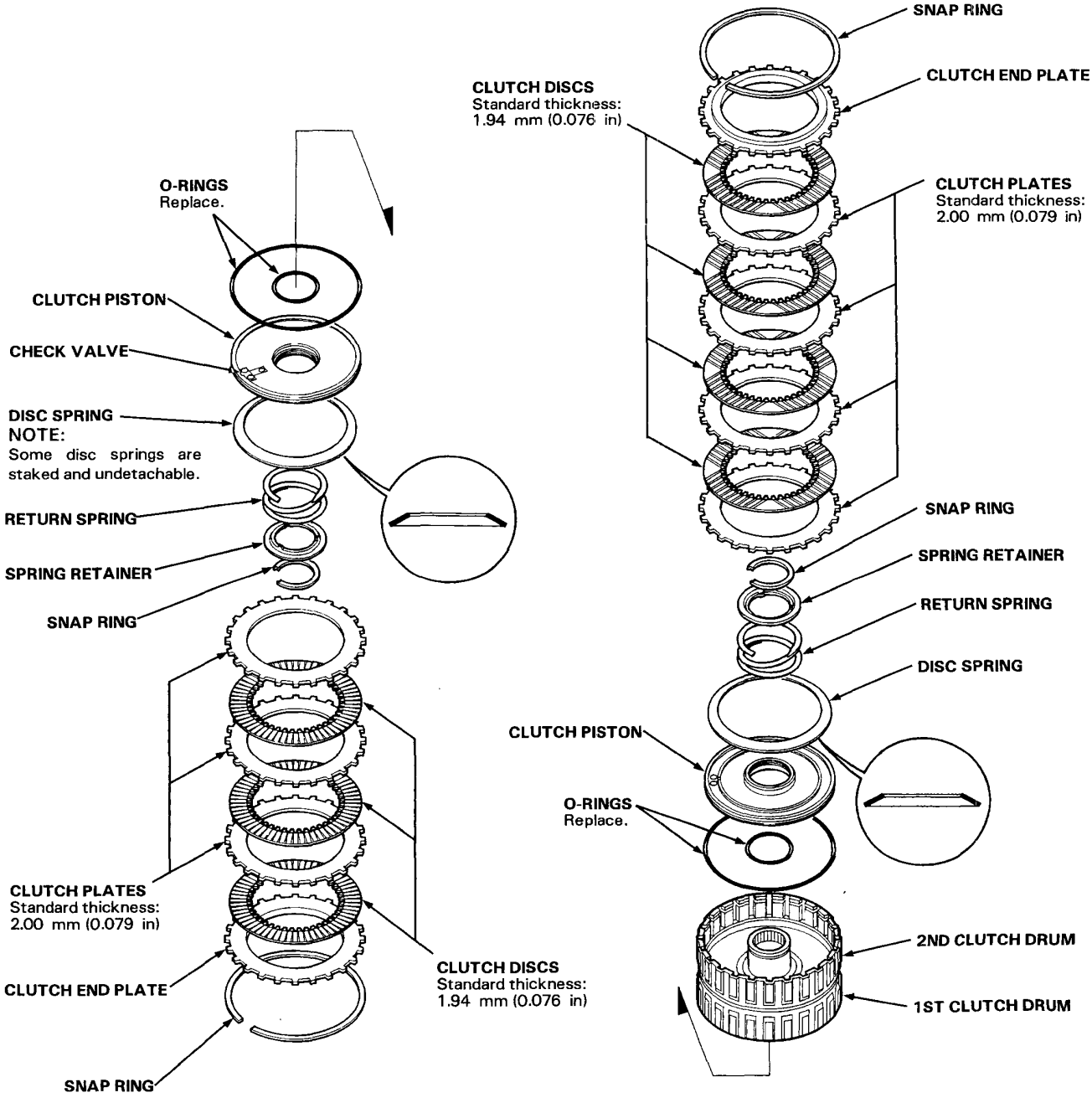

1ST/2ND CLUTCH ASSEMBLY: F20Z1 Engine

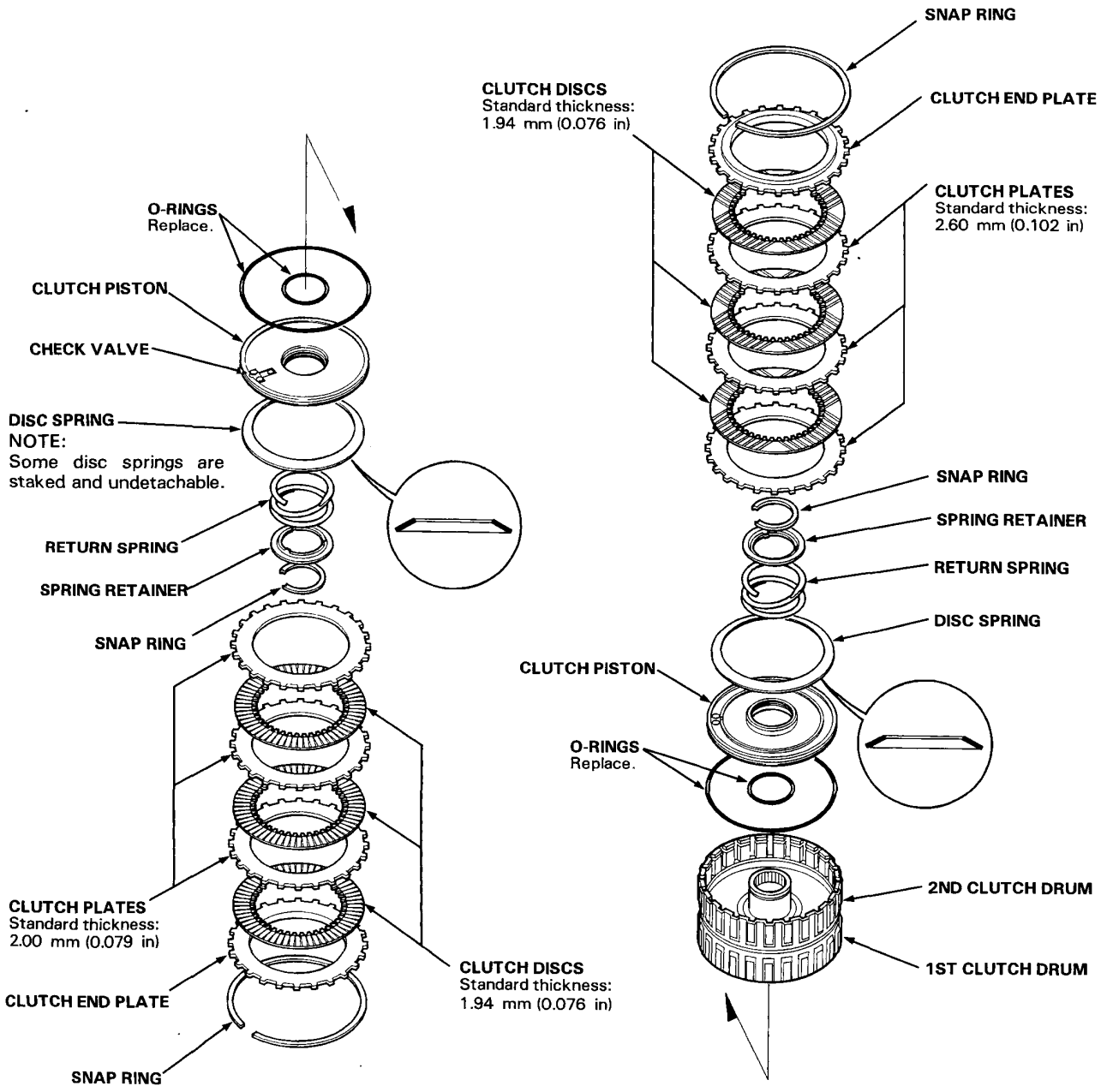

(cont'd)

Illustrated Index (cont'd)

3RD/4TH CLUTCH ASSEMBLY

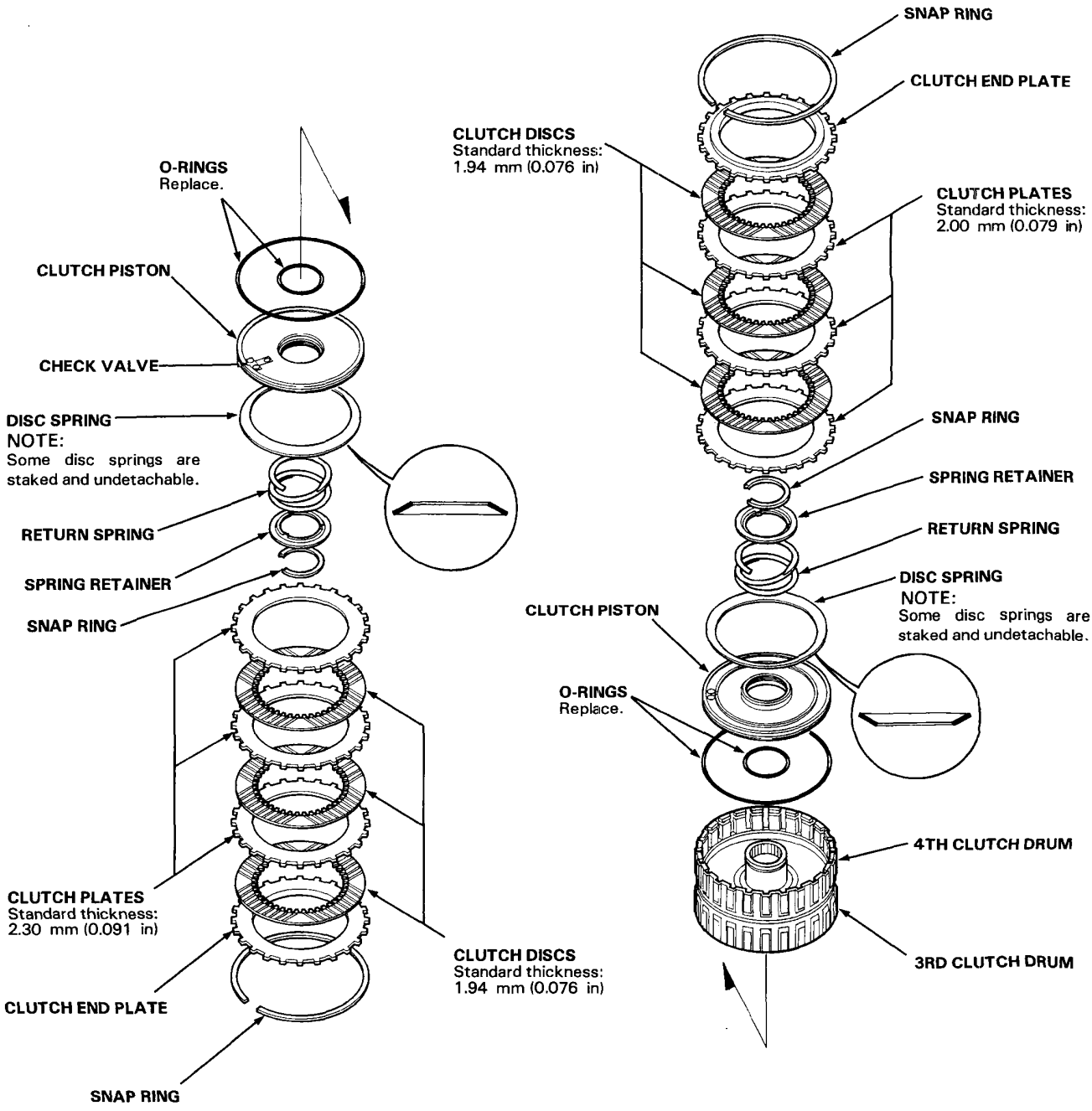

1ST-HOLD CLUTCH ASSEMBLY

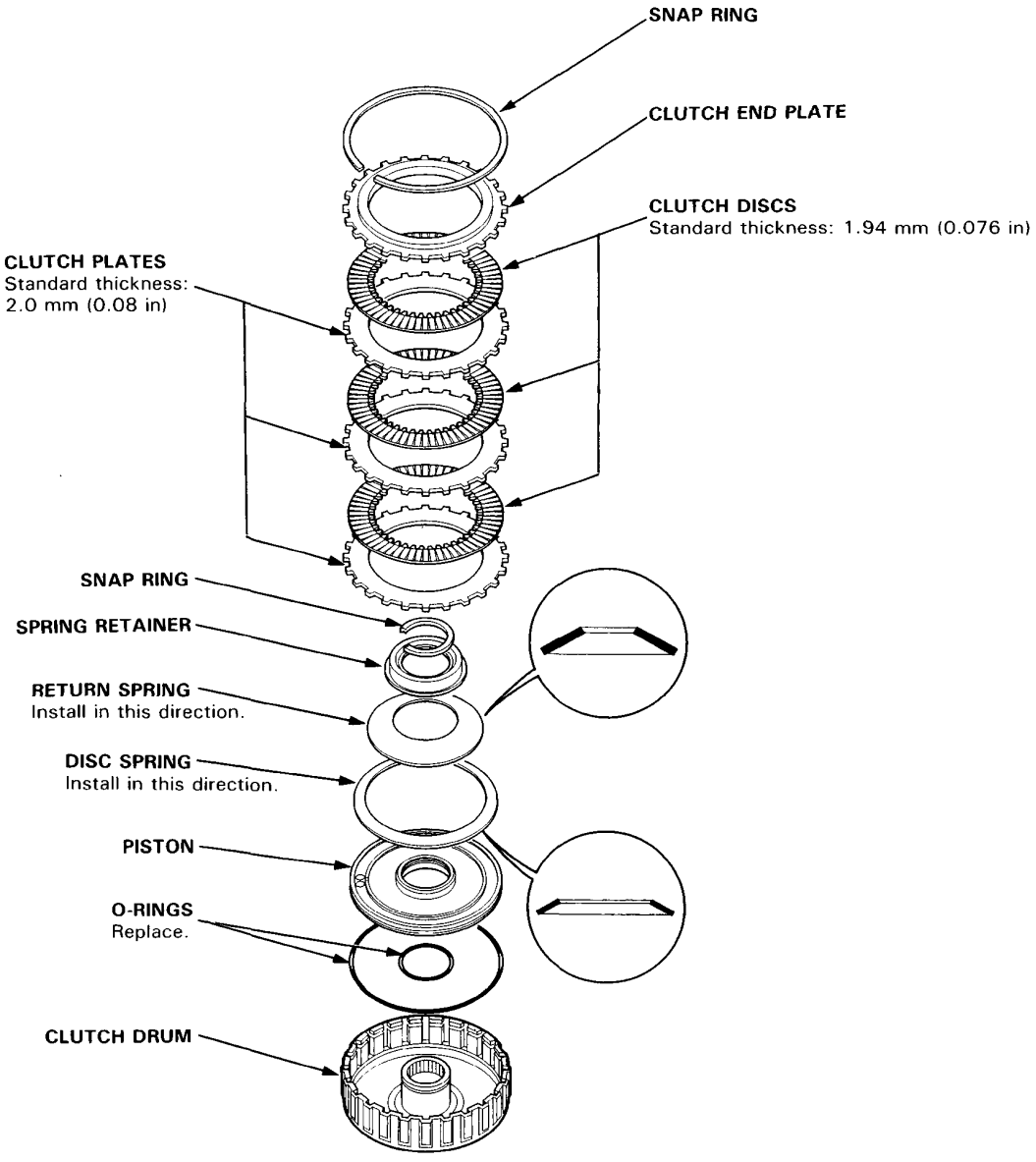

Reassembly

NOTE:
- Coat all parts with ATF.
- Replace the parts below:
  - O-rings
  - Lock washers
  - Gaskets
  - Locknuts and conical spring washers
  - Sealing washer
- Torque the 6 x 1.0 mm Bolts:
  12 N·m (1.2 kg-m , 9 lb-ft)

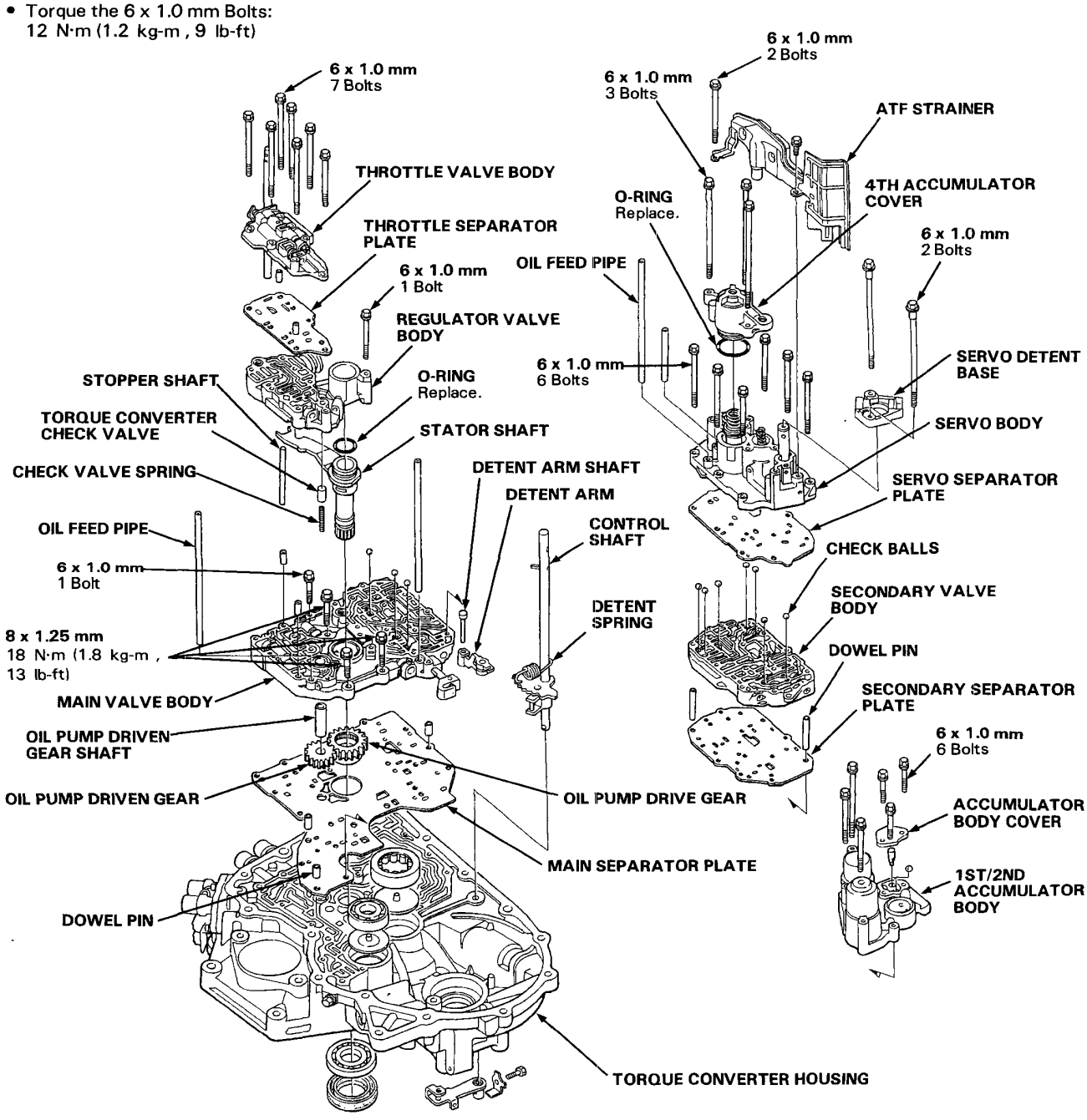

1. Install the main separator plate and the three dowel pins on the torque converter housing. Then install the oil pump gears and oil pump driven gear shaft.

   NOTE: Install the oil pump driven gear with its grooved and chamfered side facing down.

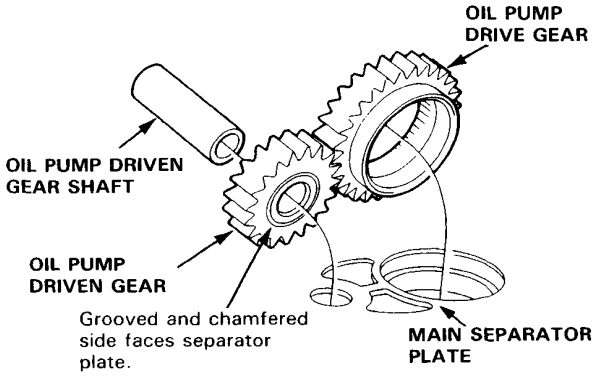

2. Install the main valve body with four bolts. Make sure the oil pump drive gear rotates smoothly in the normal operating direction, and the oil pump driven gear shaft moves smoothly in the axial and normal operating directions.

3. If the oil pump drive gear and oil pump driven gear shaft do not move freely, loosen the main valve body bolts, realign the oil pump driven gear shaft, and then retighten to the specified torque.

   CAUTION: Failure to align the oil pump driven gear shaft correctly will result in a seized oil pump drive gear or oil pump driven gear shaft.

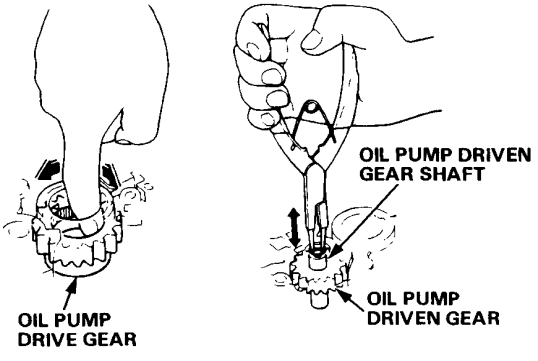

4. Install the stator shaft and stopper shaft.

5. Install the two dowel pins, torque converter check valve and torque converter check valve spring in the main valve body.

6. Install the regulator valve body with the bolt on the main valve body.

7. Install the two dowel pins and separator plate on the regulator valve body, then install the throttle valve body (seven bolts).

8. Install the secondary separator plate with two dowel pins on the main valve body.

9. Install the control shaft in the housing with the control shaft and manual valve together.

10. Install the detent arm and arm shaft in the main valve body, then hook the detent spring to the detent arm.

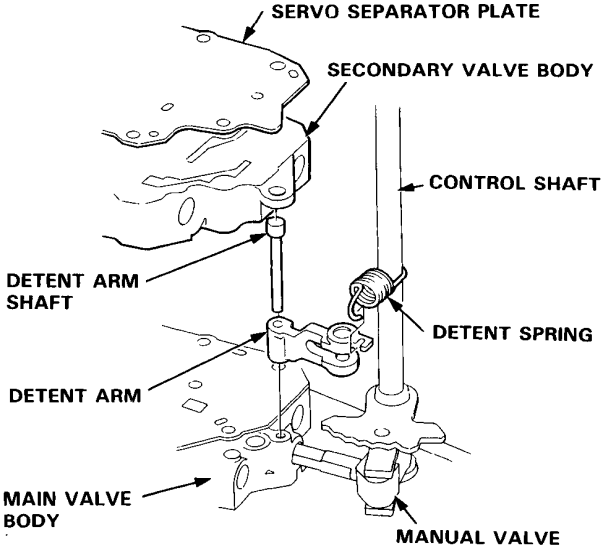

11. Install the secondary valve body, servo separator plate and servo body (six bolts).

12. Install the oil feed pipe in the servo body, then install the 4th accumulator cover (three bolts).

13. Install the ATF strainer (two bolts).

14. Install the servo detent base (two bolts).

15. Install the 1st/2nd accumulator body (six bolts).

16. Install two oil feed pipes in the main valve body and the oil feed pipe in the servo body.

(cont'd)

Reassembly (cont'd)

17. Install the differential assembly, countershaft sub-assembly, mainshaft sub-assembly, and secondary shaft sub-assembly in the torque converter housing.

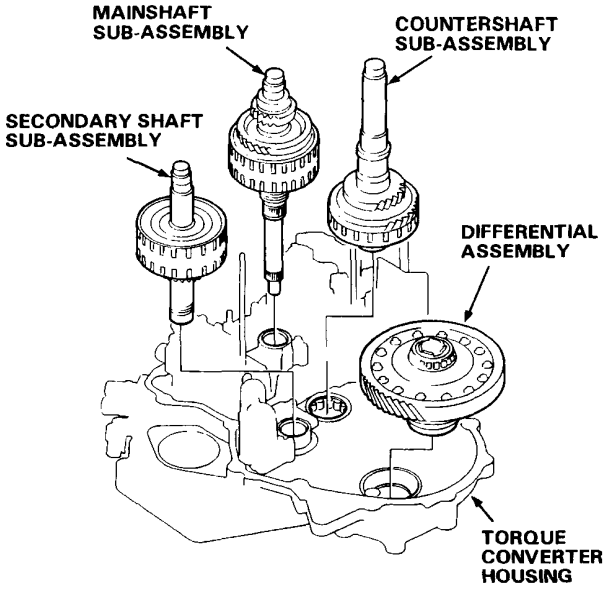

18. Install the splined washer, thrust needle bearing and needle bearings on the secondary shaft.

19. Install the needle bearings, countershaft 4th gear, reverse selector hub, and reverse selector with the shift fork on the countershaft.

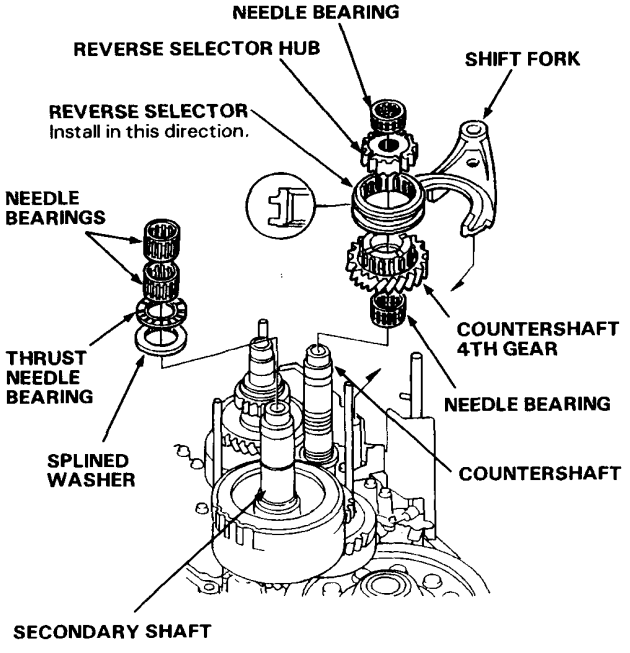

20. Turn the shift fork shaft so the large chamfered hole is facing the fork bolt hole. Then install the shift fork and the lock bolt with a new lock washer, and torque. Bend the lock tab against the bolt head.

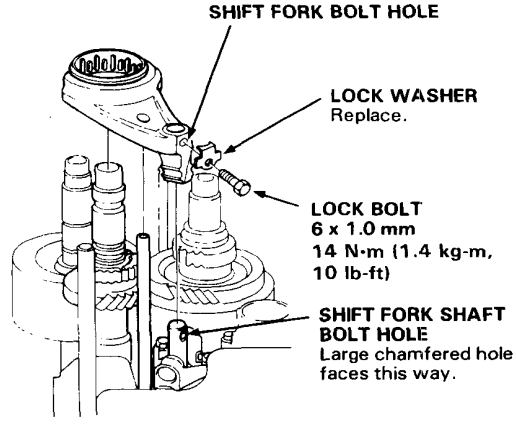

21. Install the secondary shaft 2nd gear on the secondary shaft and the countershaft reverse gear on the countershaft at a time. Then isntall the countershaft 2nd gear on the countershaft and install the thrust needle bearing and thrust washer on the secondary shaft.

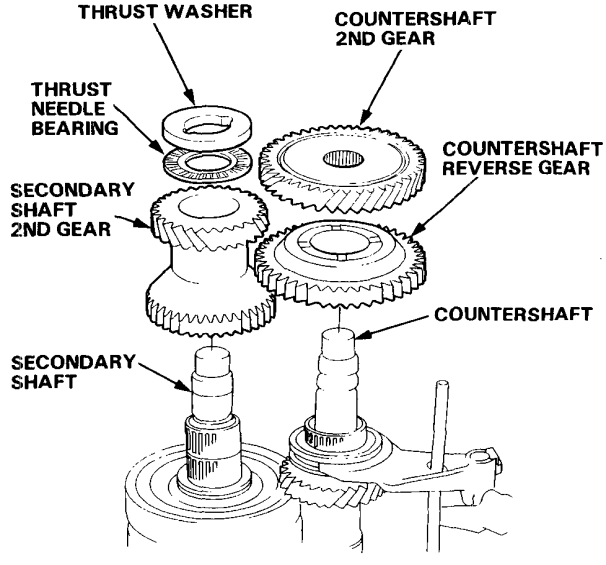

22. Slip the reverse idler gear into the transmission housing as shown.

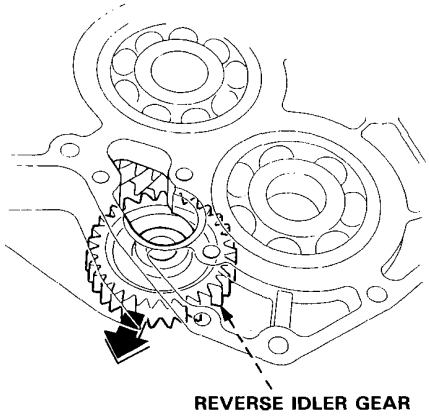

23. Align the spring pin of the control shaft with the transmission housing groove by turning the control shaft.

24. Install three dowel pins and a new gasket on the torque converter housing.

25. Place the transmission housing on the torque converter housing.

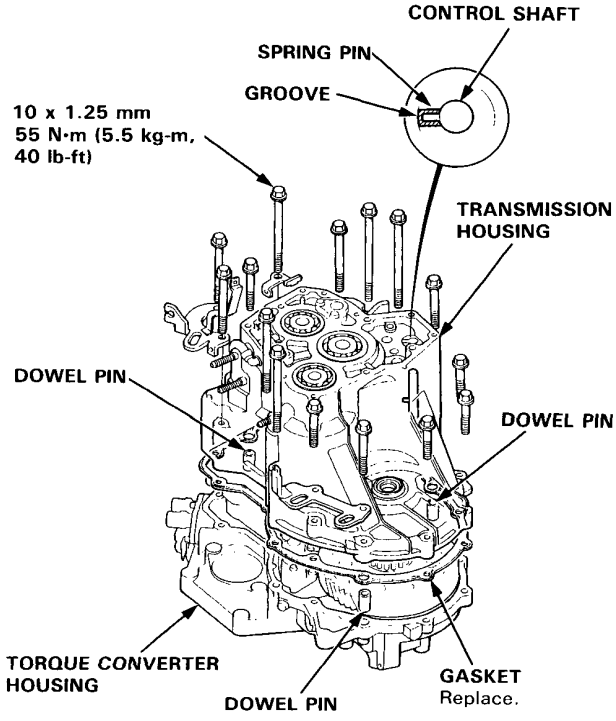

26. Install the transmission housing bolts along with the transmission hanger, harness clamp stay, throttle control cable stay/transmission hanger and harness stay. Torque the bolts in two or more steps in the sequence shown.

TORQUE: 55 N•m (5.5 kg-m, 40 lb-ft)

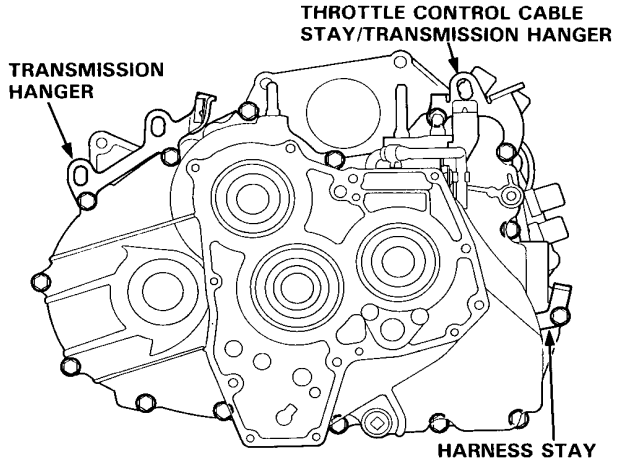

27. Coat the reverse idler gear shaft, needle bearing and new O-rings with lithium grease lightly.
Assemble new O-rings and needle bearing on the reverse idler gear shaft, then install the reverse idler gear shaft in the reverse idler gear shaft holder, aligning the D-shaped cut out of the shaft with the D-shaped area of the holder.

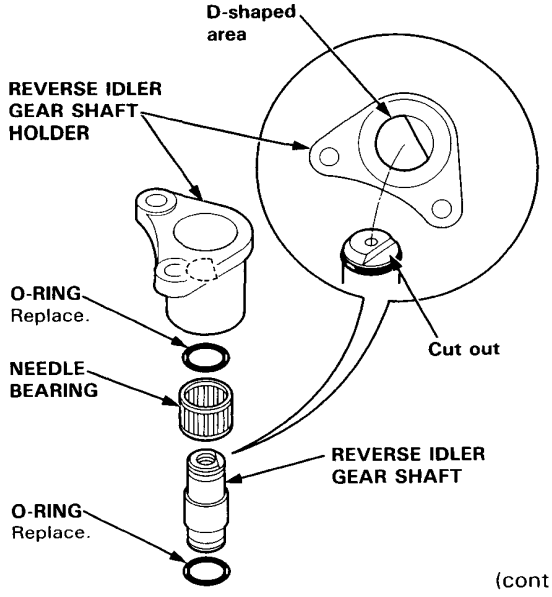

(cont'd)

Reassembly (cont'd)

28. Engage the reverse idler gear to the countershaft and mainshaft reverse gears, then install the reverse idler gear shaft/holder assembly on the transmission housing.

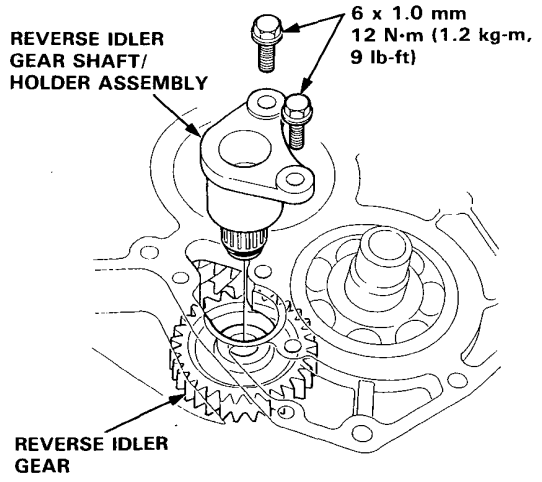

29. Install the parking brake lever on the control shaft, then install the lock bolt loosely with a new lock washer.

    NOTE: Do not tighten the lock bolt to the specified torque and bend the lock tab in this step.

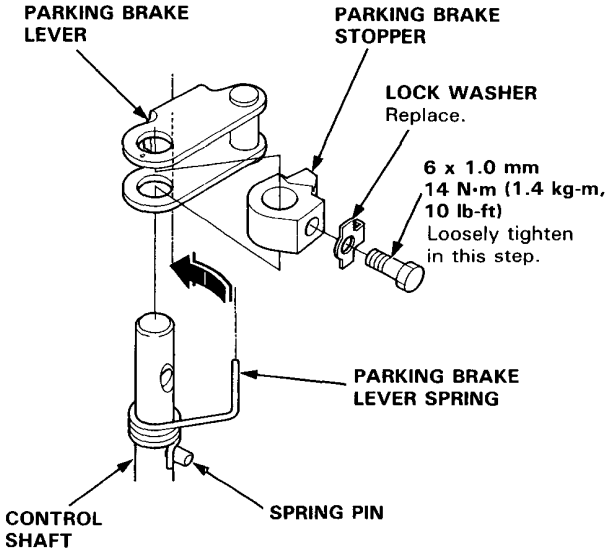

30. Slip the special tool onto the mainshaft.

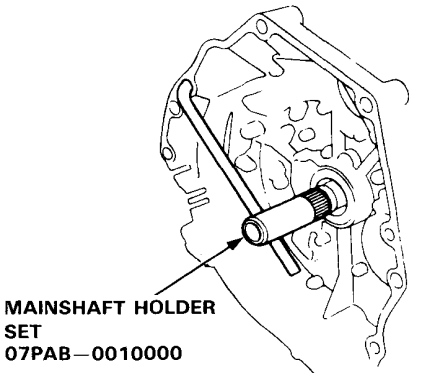

31. Lubricate the following parts with ATF:
    - Splines and threads of each shaft.
    - Threads of the old locknuts.
    - Splines of the mainshaft and countershaft idler gears.
    - Splines of the parking gear.

32. Install the mainshaft idler gear.

33. Install the old locknut on the mainshaft to seat the idler gear.

    NOTE:
    - The mainshaft locknut has left-hand threads.
    - Do not drive the idler gear on with a hammer.
    - Do not use a impact wrench, always use a torque wrench to tighten the locknut.

    TORQUE: 230 N·m (23.0 kg-m, 166 lb-ft)

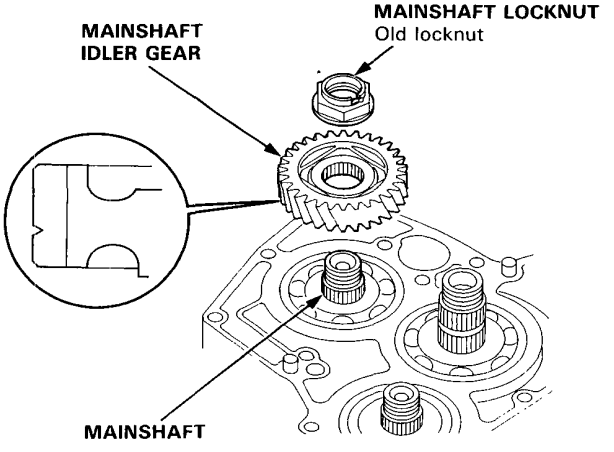

34. Install the secondary shaft idler gear on the secondary shaft.

35. Install the thrust washer, thrust needle bearing, needle bearing, countershaft idler gear and parking gear on the countershaft.

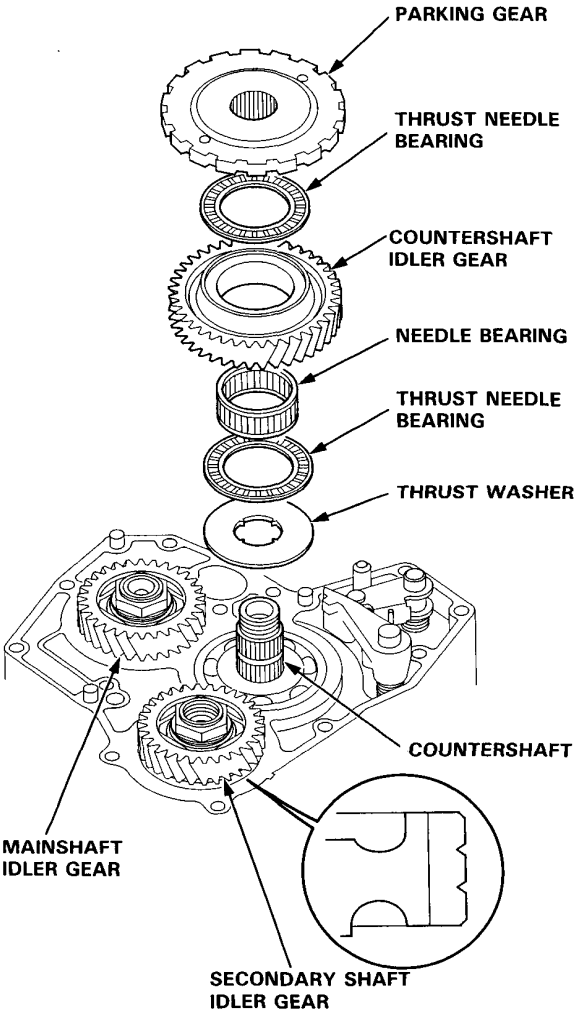

36. Install the old locknut on the secondary shaft. Tighten the old locknut to seat the secondary shaft idler gear while holding the countershaft idler gear.

NOTE:
- Do not drive the idler gear on with a hammer.
- Do not use a impact wrench, always use a torque wrench to tighten the locknut.

TORQUE: 230 N·m (23.0 kg-m, 166 lb-ft)

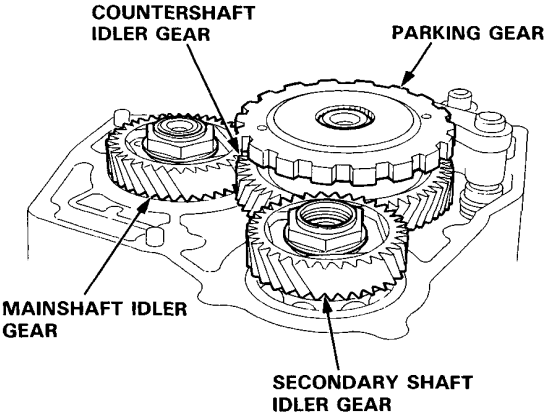

37. Install the parking brake pawl shaft and spring in the transmission housing, then install the parking brake pawl.

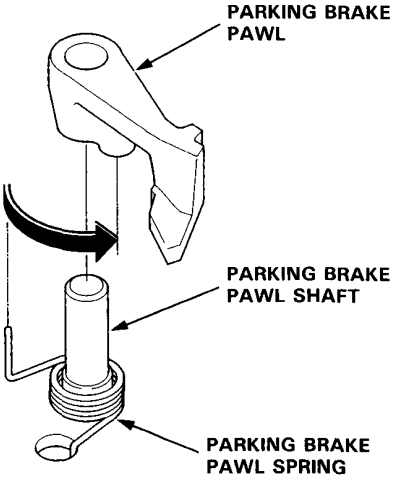

(cont'd)

Reassembly (cont'd)

38. Install the special tool on the parking gear, and engage the parking brake pawl with the parking gear by moving up the parking brake pawl.

    CAUTION: Keep all of the particles of the transmission when installing the special tool.

39. Tighten the special tool and lightly seat the parking gear.

    NOTE: Do not drive the parking gear on with a hammer.

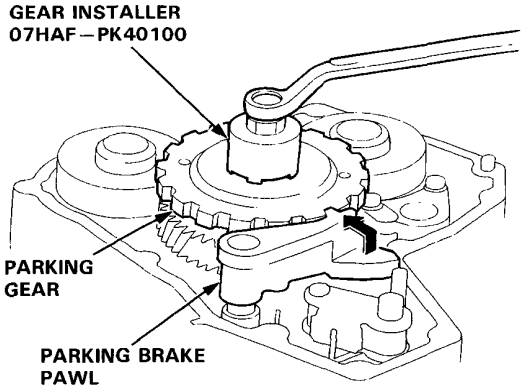

40. Remove the special tool.
41. Use the old locknut to tighten the press fit parking gear to the specified torque, then loosen it.

    NOTE: Do not use a impact wrench, always use a torque wrench to tighten the locknut.

    TORQUE: 230 N·m (23.0 kg-m, 166 lb-ft)

42. Remove the old locknut, then install new conical spring washers and new locknuts on each shaft.

    CAUTION: Install the conical spring washers in the direction shown.

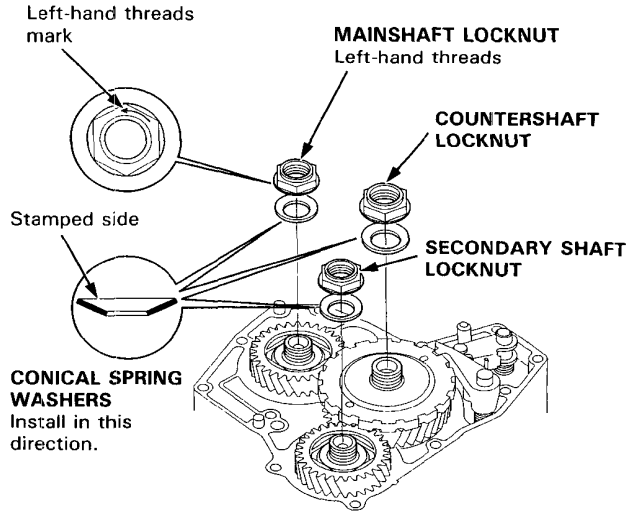

43. Tighten the locknuts to specified torque using a torque wrench.

    NOTE: Do not use a impact wrench, always use a torque wrench to tighten the locknuts.

    TORQUE: 170 N·m (17.0 kg-m, 123 lb-ft)

    NOTE: The mainshaft locknut has left-hand threads.

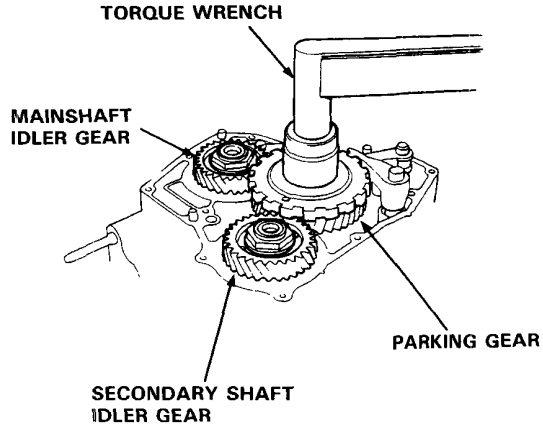

44. Stake each locknut into its shaft using a 3.5 mm punch.

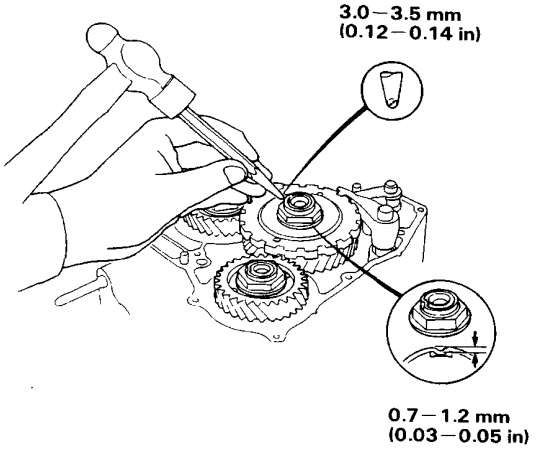

45. Set the parking brake lever in the [P] position, then verify that the parking brake pawl engages the parking gear.

46. If the pawl does not engage fully, check the parking brake pawl stopper clearance.

47. Tighten the bolt, and bend the lock tab against the bolt head.

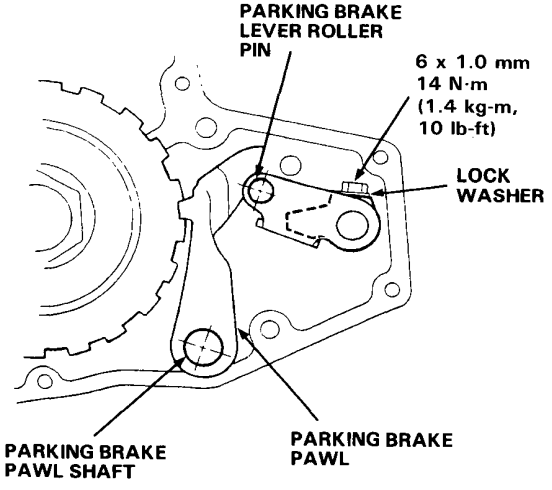

48. Install the right side cover.

TORQUE: 12 N·m (1.2 kg-m, 9 lb-ft)

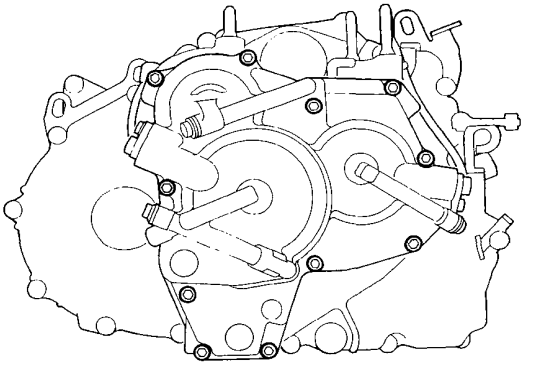

49. Install the throttle control lever and spring on the throttle control shaft.

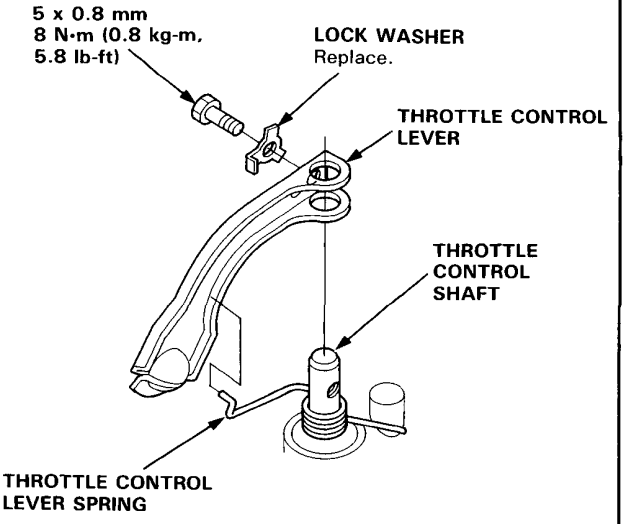

50. Install the ATF cooler pipes with new sealing washers.

TORQUE: 29 N·m (2.9 kg-m, 21 lb-ft)

51. Install the ATF level gauge.

Throttle Control Cable

Inspection

NOTE:
Before inspecting the throttle control cable, make sure that:

- Throttle cable free play is correct.
- Idle speed is correct.
- You warm up the engine to normal operating temperature (the radiator fan comes on).

1. Verify that the throttle control cable is clamped correctly in three positions.

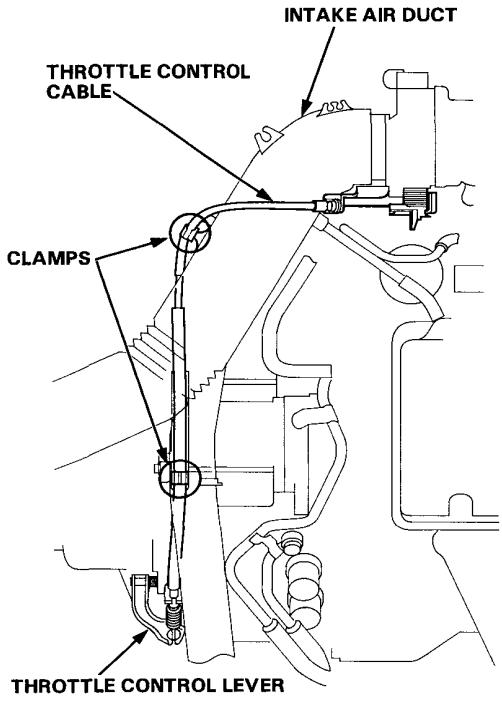

2. Verify that the throttle control lever is synchronized with the throttle linkage while depressing and releasing the accelerator pedal.

3. If the throttle control lever is not synchronized with the throttle linkage, adjust the throttle control cable.

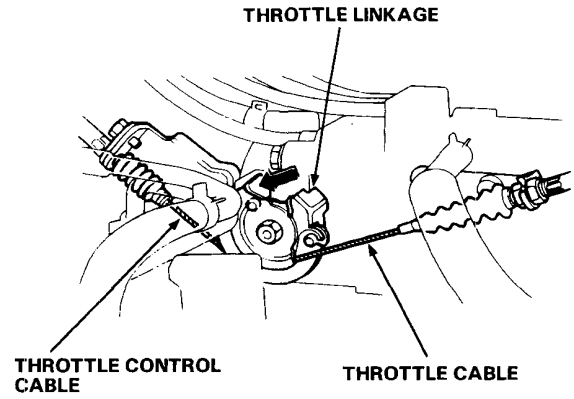

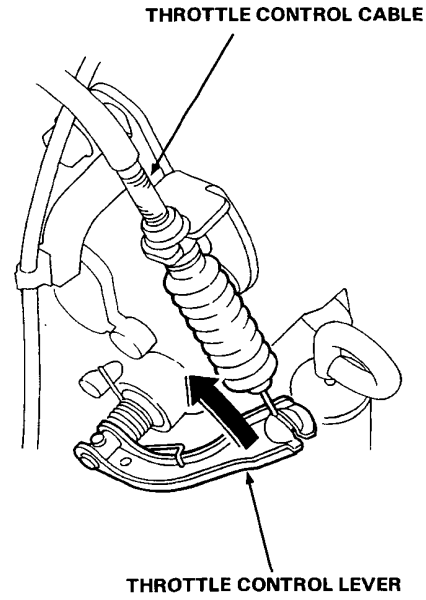

4. Check that there is play in the throttle control lever while depressing the accelerator pedal to the full-throttle position.

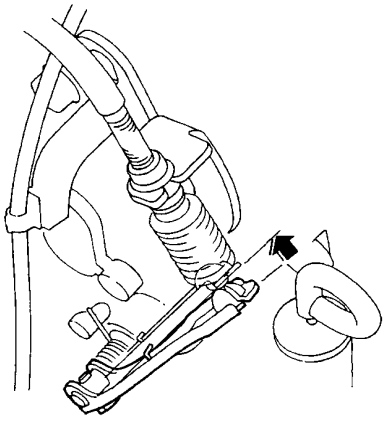

5. Remove the cable end of the throttle control cable from the throttle control lever.

6. Check that the throttle control lever moves smoothly.

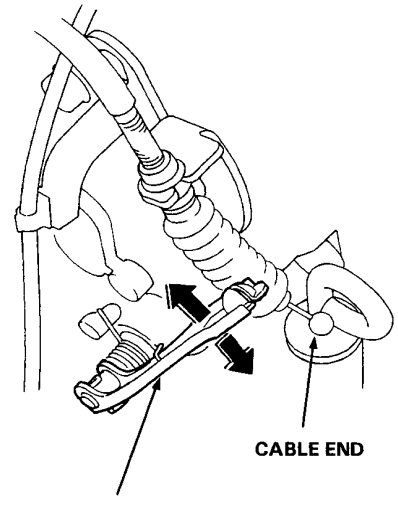

Throttle Control Cable

Adjustment

NOTE:
Before adjusting the throttle control cable, make sure that:

- Throttle cable free play is correct.
- Idle speed is correct.
- You warm up the engine to normal operating temperature (the radiator fan comes on).

1. Verify that the throttle control cable is clamped correctly in three positions.

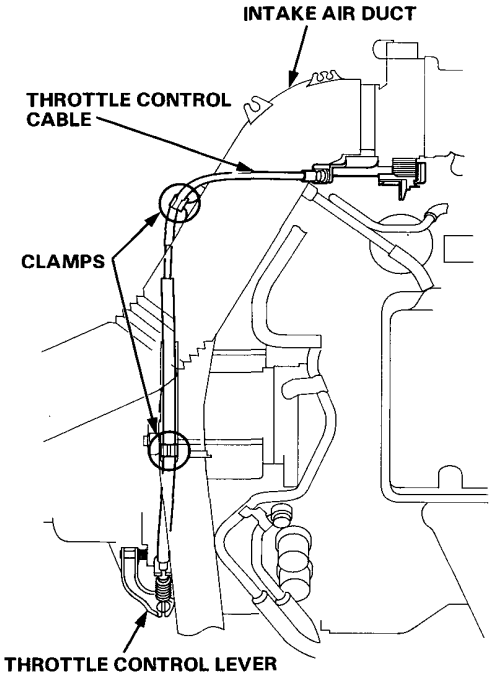

2. Verify that the throttle linkage is in the fully-closed position.

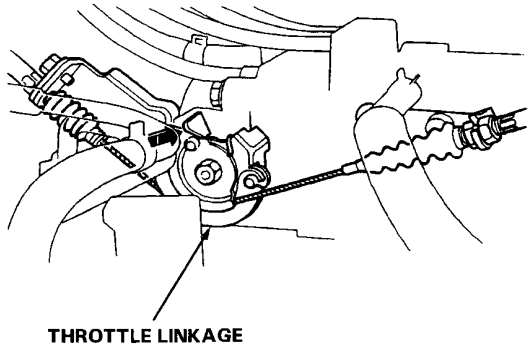

3. Loosen the locknut on the throttle control cable at the throttle control lever.

4. Remove the free play in the throttle control cable with the locknut, while pushing the throttle control lever to the fully-closed position as shown.

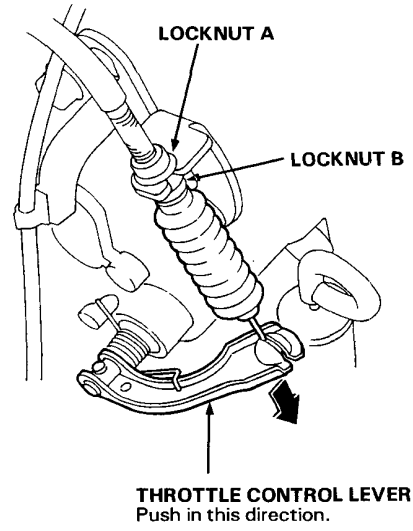

5. Tighten the locknuts.

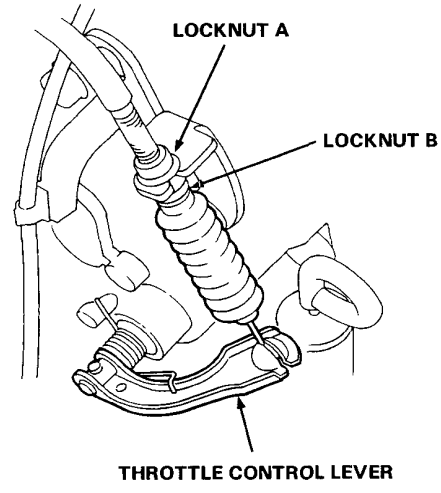

6. After tightening the locknuts, inspect the synchronization and throttle control lever movement.

NOTE:
To tailor the shift/lock-up characteristics to a particular customer's driving expectations, you can adjust the throttle control cable up to 2 mm (0.078 in) shorter than the "synchronized" point.

Conventional Brakes

Outline of Model Change

- Torque values of the rear brake caliper bracket mounting bolts have been changed.

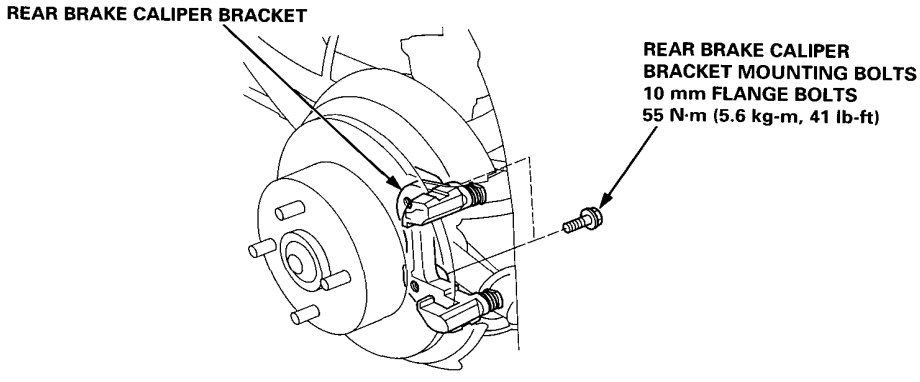

Anti-lock Brake System (ABS)

Special Tool 19-2
Illustrated Index 19-3
Anti-lock Brake System (ABS)
  Features/Construction 19-4
  Operation.....19-10
Troubleshooting
Component Locations 19-13
Circuit Diagram 19-14
ABS Control Unit Terminal
  Arrangement 19-16
Troubleshooting Precautions 19-18
Diagnostic Trouble Code (DTC)
  Indication.....19-20
Diagnostic Trouble Code (DTC)
  Symptom-to-System Chart 19-22
Troubleshooting
  ABS Indicator Light Does Not
  Come On.....19-26
  ABS Indicator Light Does Not
  Go Off.....19-28
  ABS Pump Motor Over-run.....19-31
  ABS Pump Motor.....19-33
  High Pressure Leakage.....19-39
  Pressure Switch 19-41
  High Pressure System 19-42
  Parking Brake 19-43
  Pulser/Different Diameter Tire 19-47
  Right-Front Wheel Sensor 19-48
  Left-Front Wheel Sensor 19-51
  Right-Rear Wheel Sensor.....19-54
  Left-Rear Wheel Sensor 19-57
  Rear Wheel Lock 19-60
  Front and Rear Fail-safe Relays.....19-62
  Front Fail-safe Relay 19-64
  Rear Fail-safe Relay 19-67
  Right-Front Solenoid.....19-69
  Left-Front Solenoid.....19-73
  Rear Solenoid.....19-80
  ABS Function 19-87
  ABS Control Unit 19-88
ABS Function Test 19-89
Modulator Function Check.....19-91
Modulator Unit
  Relieving System Pressure 19-92
  Brake Fluid Replacement/
  Bleeding.....19-92
  Removal/Installation 19-94
  Wire Harness Replacement.....19-96
  Pump Motor Replacement.....19-96
  Disposal 19-97
Electronic Components
  ABS Control Unit Replacement.....19-97

Outline of Model Change

- The Anti-lock Brake System (ABS) has been changed.

Special Tools

Ref. No.	Tool Number	Description	Qty	Page Reference
①	07HAJ – SG00602	ALB Checker	1	19-131
②	07PAZ – 0010100	SCS Short Connector	1	19-20

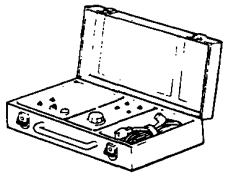

①

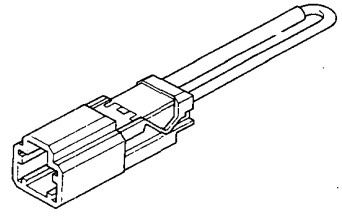

②

Illustrated Index

⚠ WARNING The accumulator contains high pressure nitrogen gas, do not puncture, expose to flame or attempt to disassemble the accumulator or it may explode; severe personal injury may result.

NOTE:
- Refer to section 23 in the shop manual '93 ACCORD (Code No. 62SN700) if the parts indicated with asterisk (*) are inspection or replacement.
- Refer to section 19 in the shop manual '93 ACCORD (Code No. 62SN700) if the parts indicated with asterisks (**) are inspection or replacement.
- LHD type is shown, RHD type is symmetrical.

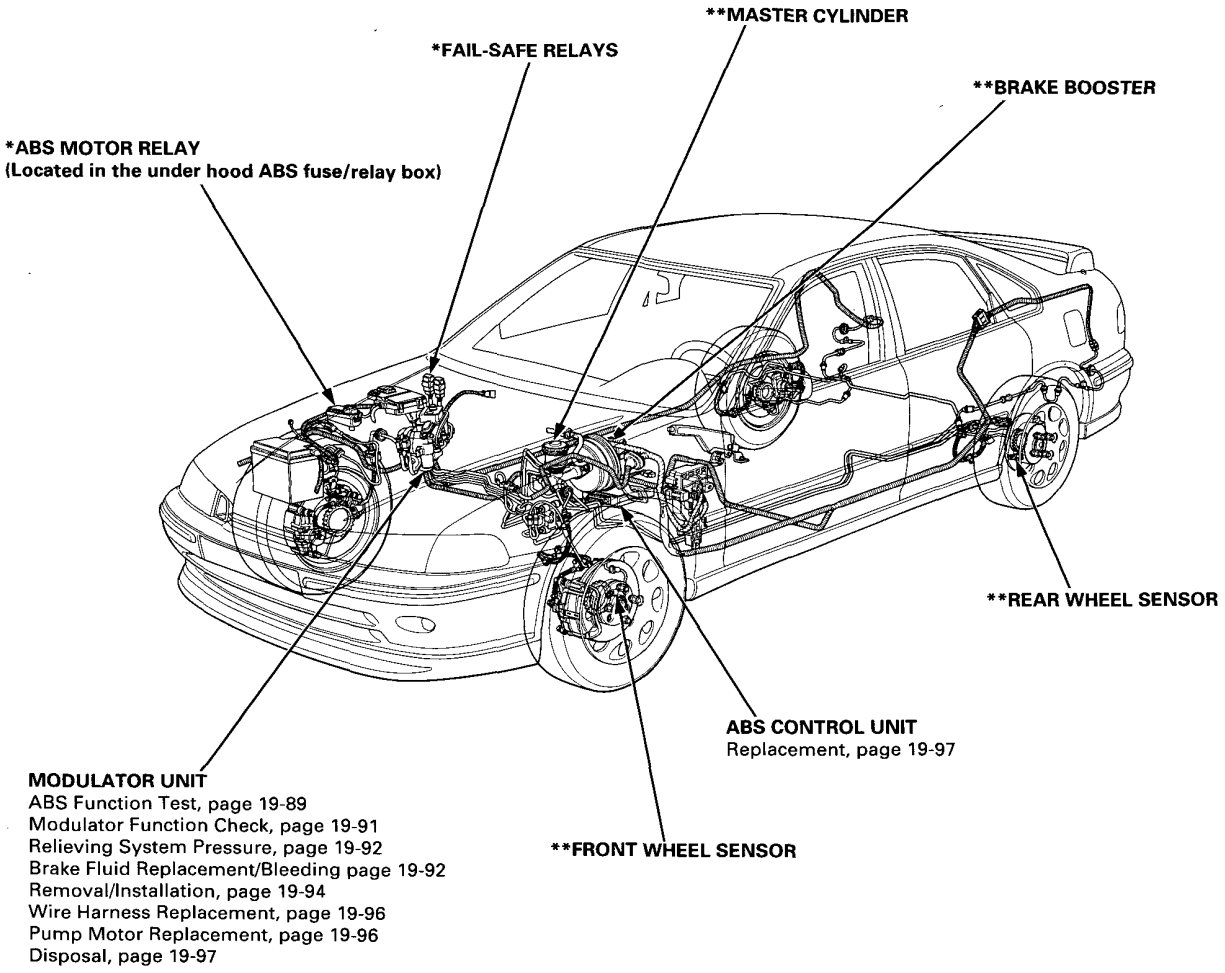

Anti-lock Brake System (ABS)

Features/Construction

In a conventional brake system, if the brake pedal is depressed very hard, the wheels can lock before the vehicle comes to a stop. In such a case, the stability of the vehicle is reduced if the rear wheels are locked, and maneuverability of the vehicle is reduced if the front wheels are locked, creating an extremely unstable condition.
The Anti-lock Brake System (ABS) modulates the pressure of the brake fluid applied to each front caliper or both rear calipers, thereby preventing the locking of the wheels, whenever the wheels are likely to be locked due to hard braking. It then restores normal hydraulic pressure when there is no longer any possibility of wheel locking.
The ABS equipped on this car is compact, with its hydraulic control system incorporated into one modulator unit. It is a 3-channel anti-lock brake system that has individual control of the front wheels and common control ("select Low") for the rear wheels. "Select Low" means that the rear wheel that would lock first (the one with the lowest resistance to lock-up) determines anti-lock brake system activation for both rear wheels.

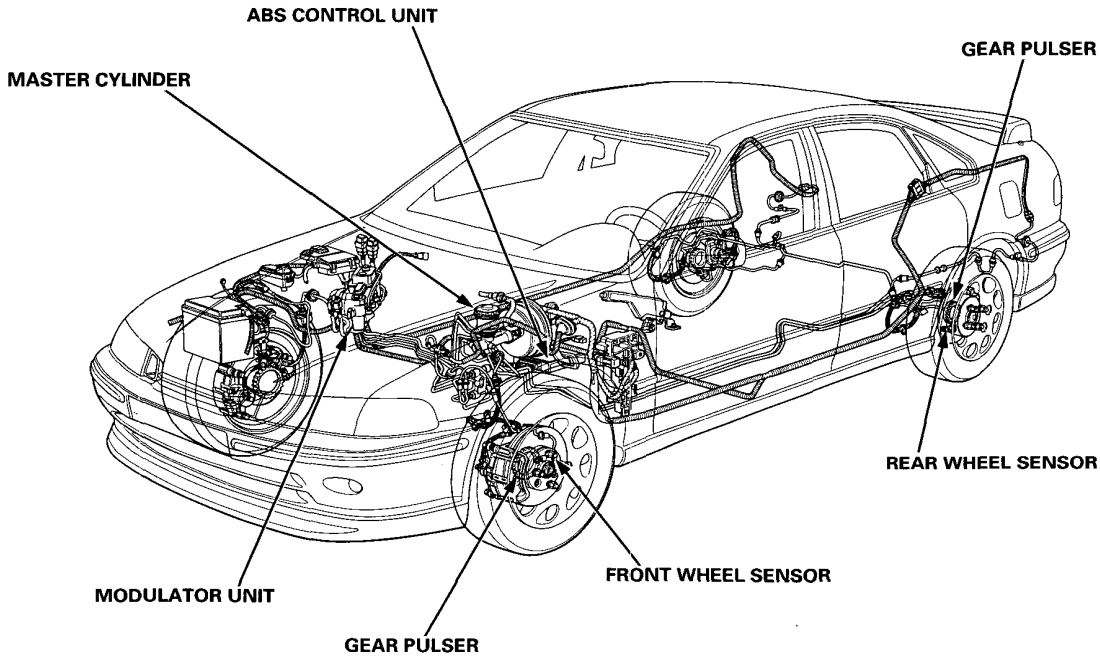

PART NAME	MAJOR FUNCTION
Gear pulser	Attached to the rotating part of the wheel and detects the wheel speed together with the wheel sensor.
Wheel sensor	Generates pulse signal corresponding to the revolution of the gear pulser.
ABS control unit	Controls the working of the anti-lock brake system by performing calculations based on the signals from the individual wheel sensors and the individual switches.
Modulator unit	* Adjusts the hydraulic pressure applied to each caliper on the basis of the signals received from the ABS control unit. * Pump, accumulator, solenoid valves, pressure switch and pistons are integrated in the modulator unit.
Motor Relay	Controls the ABS pump motor's power supply according to the signal from the ABS control unit.
Fail-safe relay	Cuts off the solenoid valve ground circuit when the fail-safe device is at work.

Modulator Unit:

The modulator unit consists of the following sub-units. It adjusts the hydraulic pressure applied to each caliper on the basis of the signals received from the ABS control unit.

- ABS pump and motor: Supplies high-pressure brake fluid to control the ABS operation.
- Accumulator: Stores high-pressure brake fluid in it.
- Pressure switch: Detects the pressure in the accumulator and transmits signals to the ABS control unit.
- Solenoid valves: Switches the ABS high-pressure passage according to the signals from the ABS control unit.
- Pistons and related parts: Receives the high-pressure brake fluid, and controls pressure to the calipers accordingly.

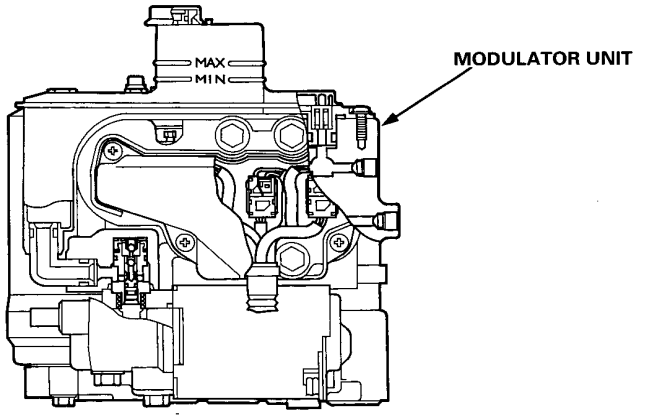

Motor and pump:

As the motor rotates, it drives the plunger-type ABS pump and raises the brake fluid pressure to approximately 25 MPa (250 kg/cm², 3,600 psi). The eccentric bearing is attached to the motor shaft end; it contacts the plunger of the pump plunger. The motor shaft's rotational motion is transmitted to the reciprocating motion of the pump plunger.
When the plunger is pushed, the brake fluid in the plunger chamber is pressurized and fed to the accumulator, solenoid, and piston, via the check valve. When the pressure in the accumulator exceeds 35 MPa (350 kg/cm², 5,000 psi), the relief valve opens to release the excess brake fluid pressure to the reservoir, thereby protecting the system.

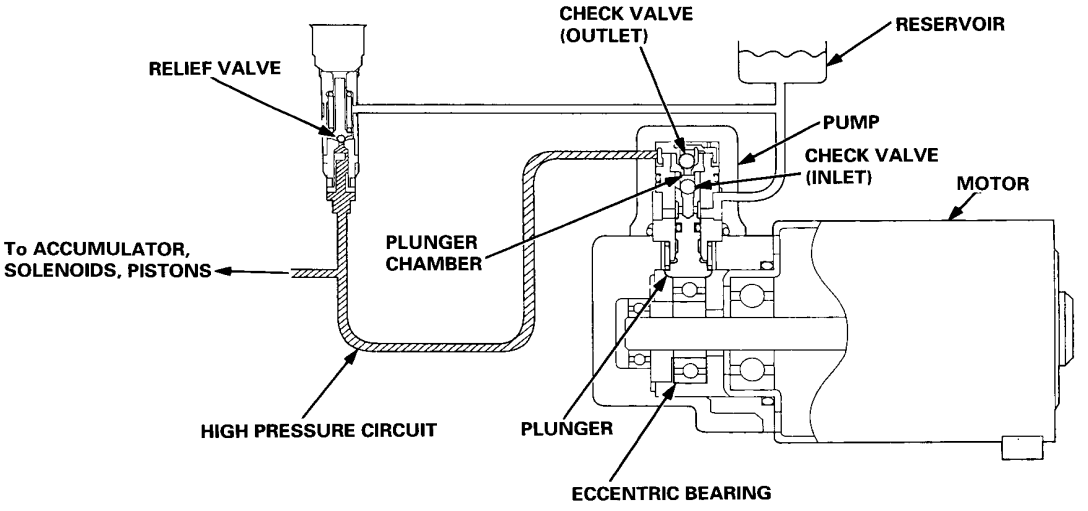

(cont'd)

Features/Construction (cont'd)

Accumulator:

The high-pressure brake fluid discharged from the pump is fed to the solenoids and pistons, but the passages to the solenoids and pistons are normally closed. Consequently, the high-pressure brake fluid accumulates in the accumulator.
The accumulator consists of two chambers separated by a free piston; that is, the fluid chamber where the brake fluid is accumulated, and the chamber filled with high-pressure nitrogen gas to maintain the fluid at a given pressure.
When the ABS operates, the constant high-pressure brake fluid in the accumulator is supplied to the piston.

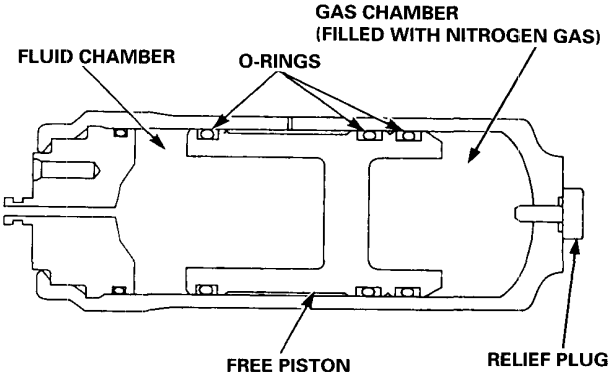

Pressure switch:

The pressure switch monitors the pressure accumulation in the accumulator. When the pressure in the accumulator rises, the Bourdon tube in the pressure switch deforms outward, which in turn activates the micro-switch by the force of the spring attached to the sensing lever. When the pressure in the accumulator drops due to ABS operation, the Bourdon tube moves in the opposite direction, and the micro-switch is eventually turned off.
The ABS control unit detects the fluid pressure in the accumulator by the ON/OFF signals from the pressure switch.

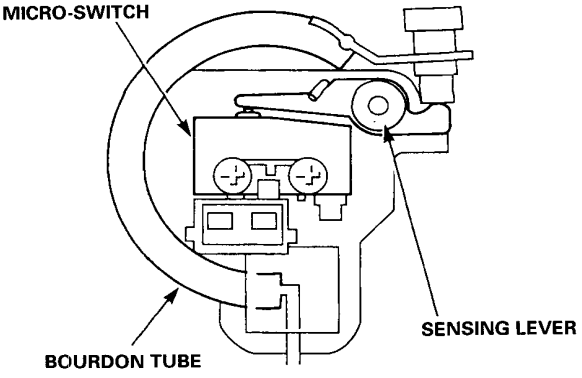

Piston/valve:

The piston/valve assembly consists of the piston, cut valve, and sleeve. There are four piston/valve assemblies in the modulator unit to control the brake fluid pressure to each caliper. The piston/valve assemblies for the rear brakes also serve as proportioning control valves to prevent the rear wheels from locking if the ABS malfunctions or when the ABS is not activated.

Solenoid valves:

The modulator unit opens and closes the inlet and outlet solenoid valves, and shifts the ABS high-pressure passage according to the signals from the ABS control unit. There are three solenoid valve assemblies, each containing an inlet and outlet valve, in the modulator unit; one for each front wheel, and one for both rear wheels. The inlet valves are normally open (open when to the coil is not energized), while the outlet valves are normally closed.

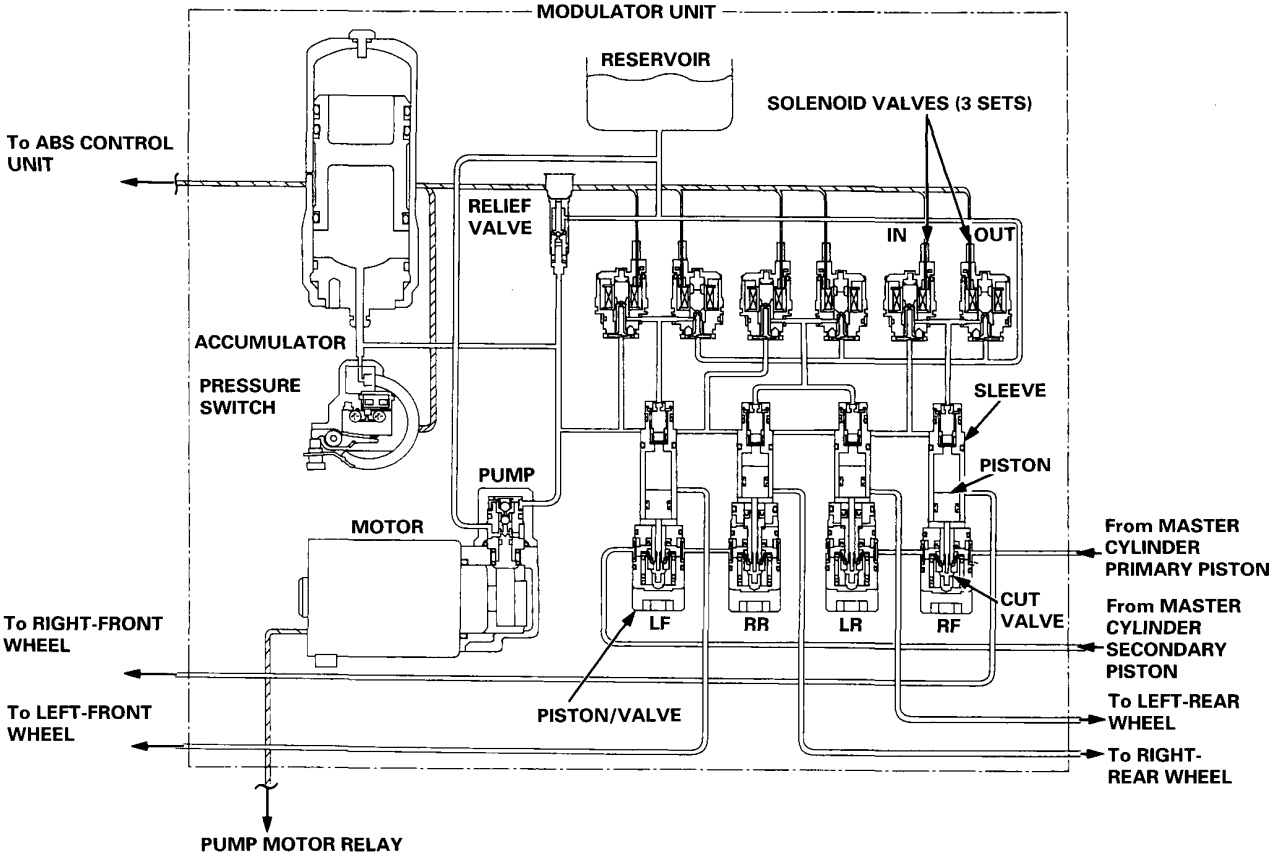

(cont'd)

Features/Construction (cont'd)

Wheel sensor:

The wheel sensor is a contactless type that detects the rotating speed of a wheel. It consists of a permanent magnet and coil. When the gear pulsers attached to the rotating parts of each wheel turn, the magnetic flux around the coil in the wheel sensor alternates, generating voltages with frequency in proportion to wheel rotating speed. These pulses are sent to the ABS control unit, and the ABS control unit identifies the wheel speed.

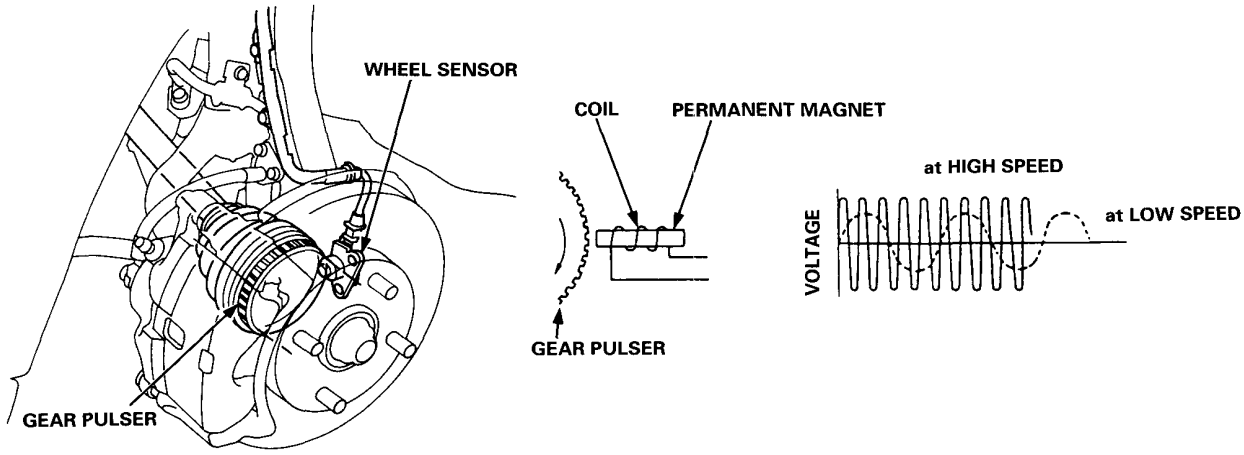

ABS control unit:

The ABS control unit consists of a main function, which controls the operation of the anti-lock brake system, and sub-function, which controls the pump motor and "self-diagnosis".
For safety, the main function consists of two systems, and the ABS control unit activates the solenoid valve only when the outputs of the two systems agree with each other.

- The main function section of the ABS control unit performs calculations on the basis of the signals from each wheel sensor, and controls the operation of the anti-lock brake system by activating the solenoid valves in the modulator unit for each front brake and for the two rear brakes. The ABS has individual control of the front wheels and common control ("Select Low") for the rear wheels. "Select Low" means that the rear wheel that would lock first (the one with the lowest resistance to lock-up) determines the ABS activation for both rear wheels.
- The sub-function section has the fail-safe function that monitors the system operation by inputting the brake switch, parking brake switch and pressure switch signals, and stops the anti-lock brake system when it detects an abnormality in the system. It also has a self-diagnosis function and the pump motor control function.

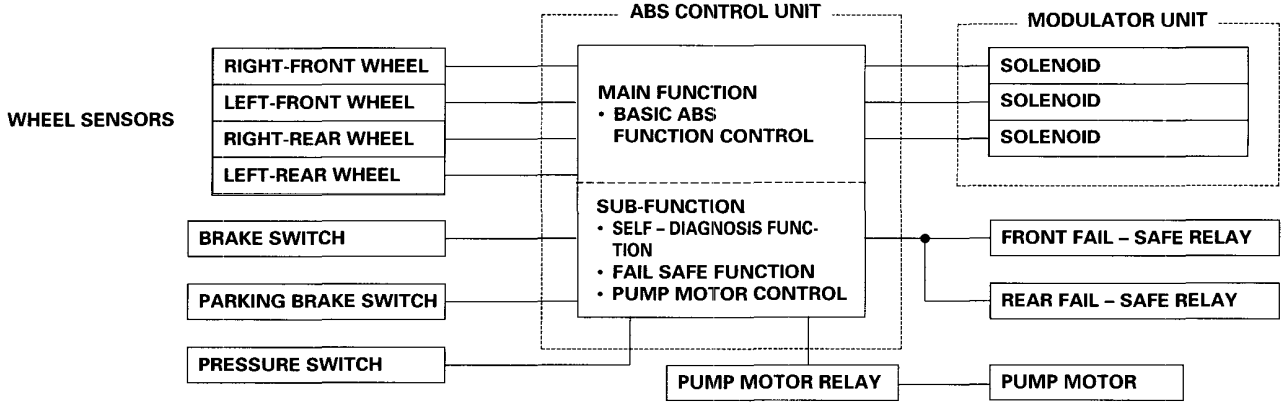

Pump motor control:

The ABS control unit monitors the brake fluid pressure in the accumulator by the pressure switch ON/OFF signals. The ABS control unit turns the pump on when the pressure in the accumulator drops, and stops the pump when the pressure rises to the specified value.
If the pressure does not reach the specified value after the motor has operated continuously for a specified period, the ABS control unit stops the motor and activates the ABS indicator light.

Self-diagnosis function:

The self-diagnosis function, provided in the sub-function of the ABS control unit, monitors the main system functions by constantly transmitting the data between the two Central Processing Units (CPUs). When an abnormality is detected, the ABS control unit turns the ABS indicator light on and stops the ABS, although the basic brake system continues to operate normally.
When the ABS control unit detects an abnormality with the ABS and turns the ABS indicator light on, the diagnostic trouble code (DTC), which shows the problem part or unit, is recorded in the control unit. The DTC can be read by the blinking frequency of the ABS indicator light.

Fail-safe function:

When an abnormality is detected in the ABS control system self-diagnosis, the solenoid operations are suspended by turning off the two fail-safe relays. This disconnects the ground circuits of all the solenoid valves to prevent ABS operation.
Under these conditions, the braking system functions just as an ordinary one.

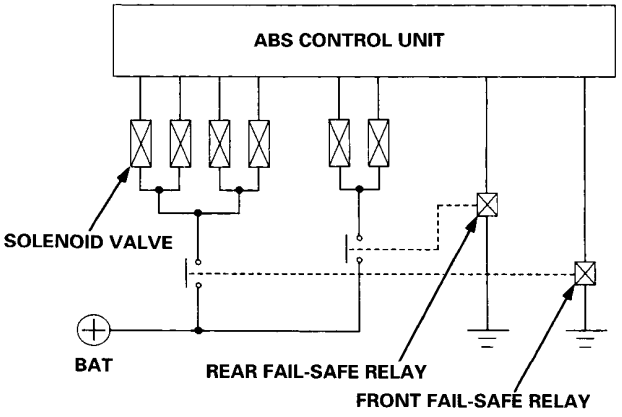

Fail-safe relay:

The fail-safe relay's terminal side contact is normally open. When there is continuity at the relay coil, the fail-safe relay is closed, thereby connecting the ground circuit to the solenoid valve.

ABS indicator light:

The ABS control unit turns the ABS indicator light on when one or more of the following abnormalities are detected. This is only a partial list.

- When the operating time of the motor in the power unit exceeds the specified period.
- When vehicle running time exceeds 30 seconds without releasing the parking brake.
- When absence of speed signals from any of the four wheel sensors is detected.
- When the activation time of all solenoids exceeds a given time, or an open circuit is detected in the solenoid system.
- When solenoid output is not detected in the simulated ABS operation when the engine is started or the vehicle is driven.

To check the indicator light bulb, the light is activated when the ignition switch is first turned on. The light goes off after the engine is started if there is no abnormality in the system.

Operation

The following description of ABS operation is for one of the front wheels. The ABS operation for the remaining wheels is the same.

Ordinary braking function:

In ordinary brake operations when the ABS is not functioning, the solenoid outlet valve is closed and the inlet valve is open, the brake fluid pressure is transmitted to the back-pressure chamber between the sleeve and piston, and the cut valve is pushed by the piston. As the high-pressure is also transmitted to chamber A between the sleeve and cylinder, the sleeve pushes the cut valve seat toward the cut valve, too.
Under there conditions, the cut valve is kept open, and the hydraulic pressure from the master cylinder is transmitted to the caliper just like an ordinary brake system.

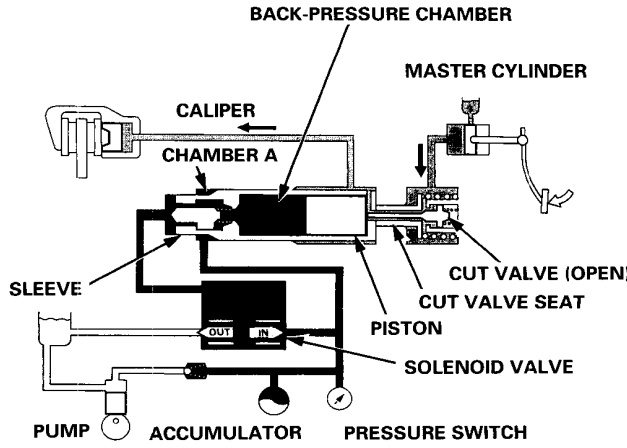

When ABS is functioning:

- Control by reducing caliper fluid pressure:
  When brake inputs (force exerted on brake pedal) are excessively large, and a possibility of wheel locking occurs, the control unit operates the solenoid valve, closing the inlet valve and opening the outlet valve.
  As a result, high pressure in the back-pressure chamber is released to the reservoir, and the piston is pushed by the caliper fluid pressure toward the back-pressure chamber. However, the cut valve seat is kept in the pushed position because high pressure is transmitted to chamber A. As the piston moves, the cut valve moves and shuts the flow from the master cylinder to the caliper, the volume of the pressure reduction chamber connected to the caliper increases, and the fluid pressure in the caliper declines, relieving the braking force. The wheel speed is therefore restored, preventing the wheel from locking.

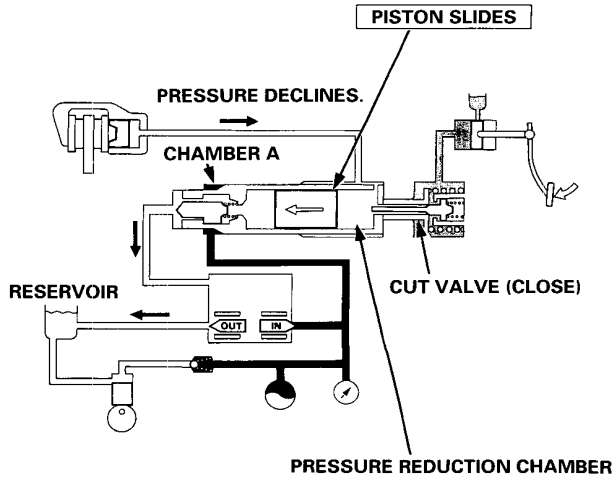

- Control by increasing caliper fluid pressure:
  When the ABS control unit senses that the caliper fluid pressure declined, and the wheel speed is restored, it signals the solenoid inlet valve to open and the solenoid outlet valve to close.
  As a result, the high pressure brake fluid is transmitted to the back-pressure chamber, and the piston is pushed toward the pressure reduction chamber, increasing the caliper fluid pressure, and thereby the braking force again.
  When the master cylinder side's fluid pressure is low, the cut valve is slightly opened as the piston moves, and the caliper fluid pressure is transmitted to the master cylinder. The kickback is felt on the brake pedal this time. When the force depressing the brake pedal is relieved while the ABS is functioning, the cut valve is opened and the pressure in the pressure reduction chamber is returned to the master cylinder side. As a result, the caliper fluid pressure is relieved.

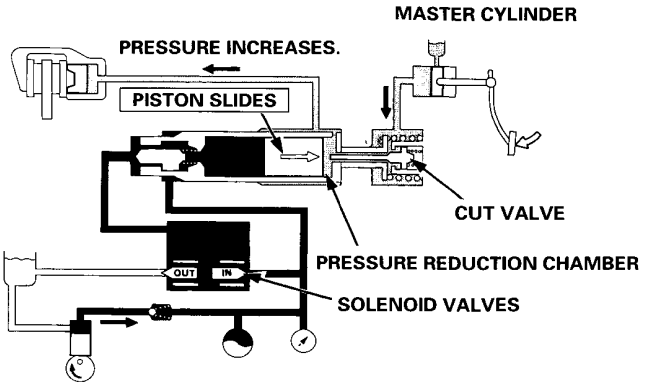

When high-pressure declines:

The ABS control unit monitors the pressure in the high-pressure passage by means of the pressure switch signals. The ABS control unit turns the ABS indicator light on, and stops the ABS when it detects an excessive drop in pressure in the high-pressure passage.
When the pressure declined due to leakage from the passage, for example, the pressure in chamber A declines, too, and the cut valve seat and sleeve return toward chamber A.
As a result, the valve at the sleeve end closes, which hydraulically locks the back-pressure chamber and blocks the piston movement. Because the cut valve opens as the cut valve seat moves, this connects the brake fluid passage between the master cylinder and caliper for ordinary brake operation.

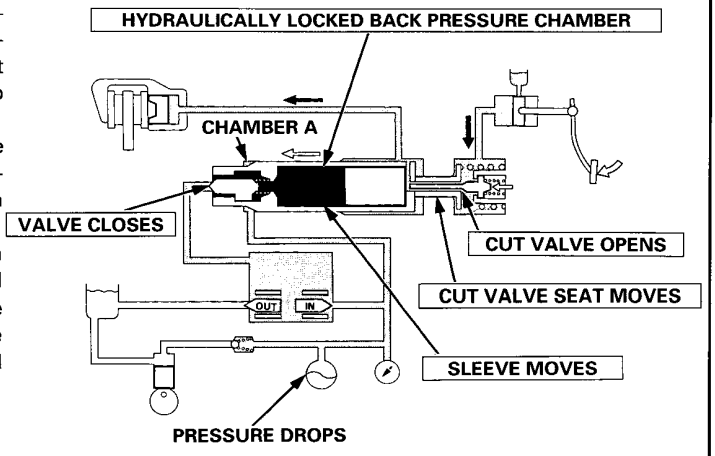

(cont'd)

Operation (cont'd)

Proportioning Control Valve Function:

The modulators for the rear brakes serve as proportioning control valves to prevent the rear wheels from locking if the ABS malfunctions or when the ABS is not activated. When this function is not provided, the hydraulic pressure from the master cylinder and the hydraulic pressure to the rear brake system are equal.
If the fluid pressure is transmitted to the rear brakes at the same rate as the front brakes, the rear wheels will lock first because the rear axle load becomes lighter when the brakes are applied.
To prevent the rear wheels from locking, the proportioning control valve function changes the distribution rate of the fluid pressure to the rear wheels when the pressure in the rear brake system exceeds the given value of the fluid pressure from the master cylinder. The fluid pressure point where the distribution rate changes is called the turning point.

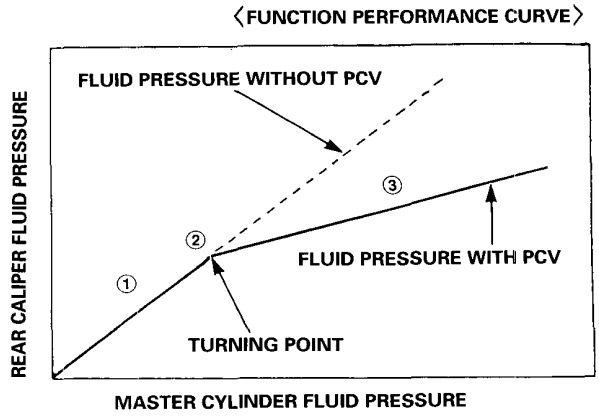

The cut valve seat in the rear brake system has a shoulder between sections A and B. Section A, where pressure from the master cylinder is applied, has a smaller diameter than section B, where pressure from the rear brake caliper is applied. This design provides the proportioning control valve function as follows.

1. When the fluid pressure from the master cylinder is below the turning point, the cut valve seat is pushed by the spring force and the cut valve is open. Therefore, the fluid pressure from the master cylinder is transmitted to the rear brake caliper side. Under these conditions, fluid pressure from the master cylinder is equal to the pressure to the rear brake caliper, but because of the diameter difference between sections A and B, the force on the cut valve overcomes the spring force, moving the cut valve seat toward the cut valve slowly.

2. When the fluid pressure to the rear brake caliper reaches the turning point, the cut valve is closed by the cut valve seat, blocking the fluid passage between the master cylinder side and rear wheel cylinder side.

3. When the fluid from the master cylinder exceeds the turning point, the fluid pressure from the master cylinder rises, while the pressure to the rear brake caliper remains at the turning point value. As a result, the cut valve seat moves away from the cut valve and the cut valve opens. The passage between the master cylinder and caliper opens momentarily, but it is blocked again because the fluid pressure to the brake caliper rises, and the cut valve seat moves to close the cut valve. As described above, when the pressure in the master cylinder is above the turning point, the cut valve seat reduces the pressure in the rear brake caliper to the prescribed amount by repeating this process.

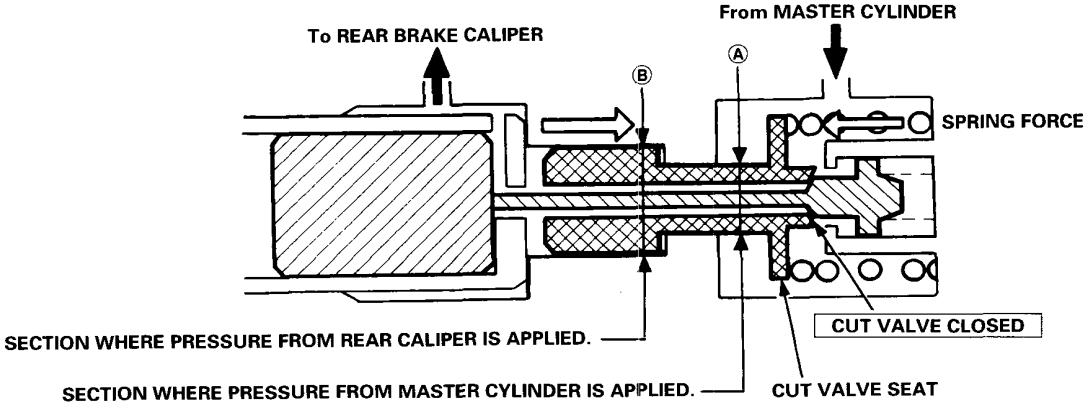

Component Locations

- The ABS inspection connector (6P) is located on the cross-member under the passenger's seat.
- The service check connector (2P) is located on the side kick panel of the passenger's seat side.
- The under-dash fuse/relay box is located under the dash of the driver's seat side.

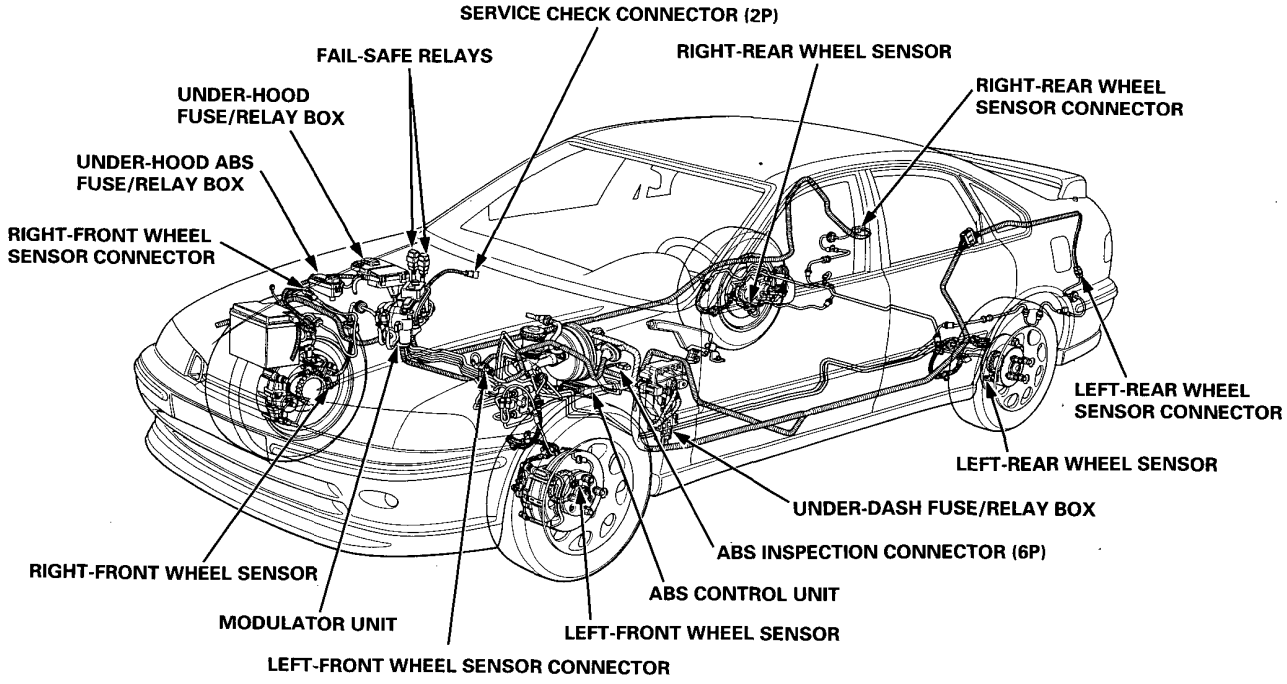

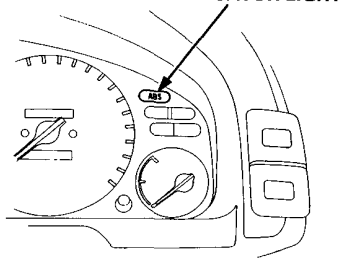

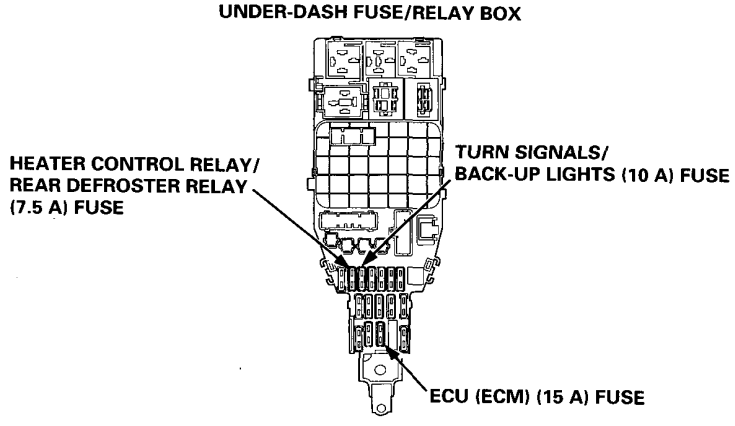

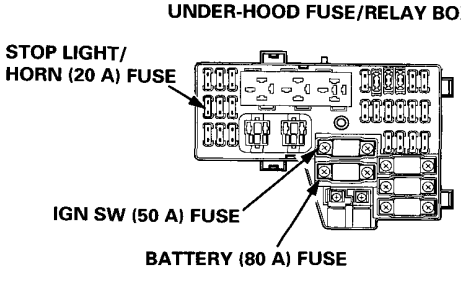

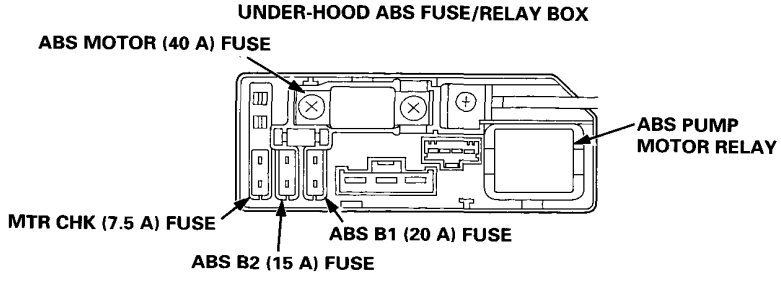

Circuit Diagram

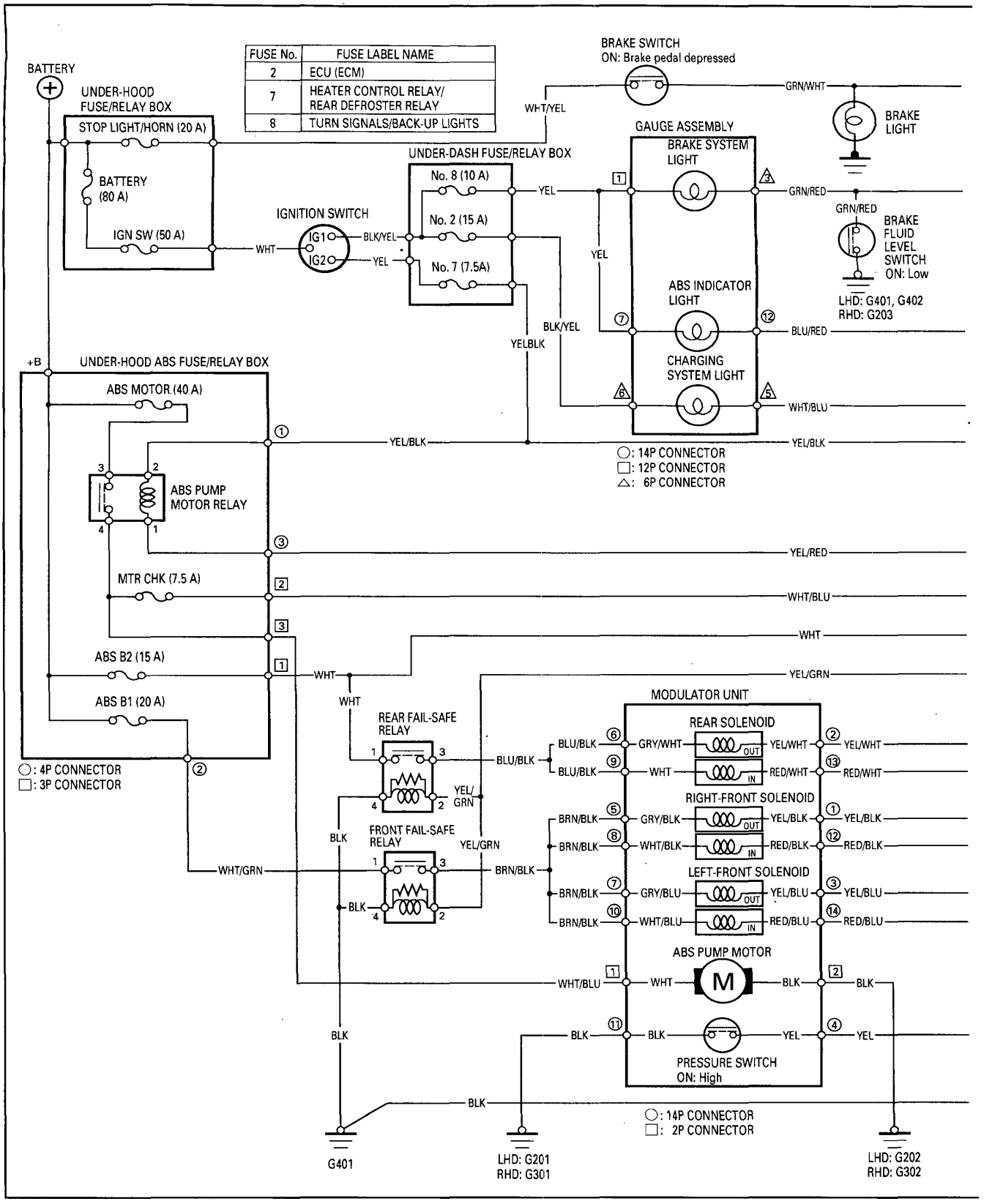

FUSE No.	FUSE LABEL NAME
2	ECU (ECM)
7	HEATER CONTROL RELAY/ REAR DEFROSTER RELAY
8	TURN SIGNALS/BACK-UP LIGHTS

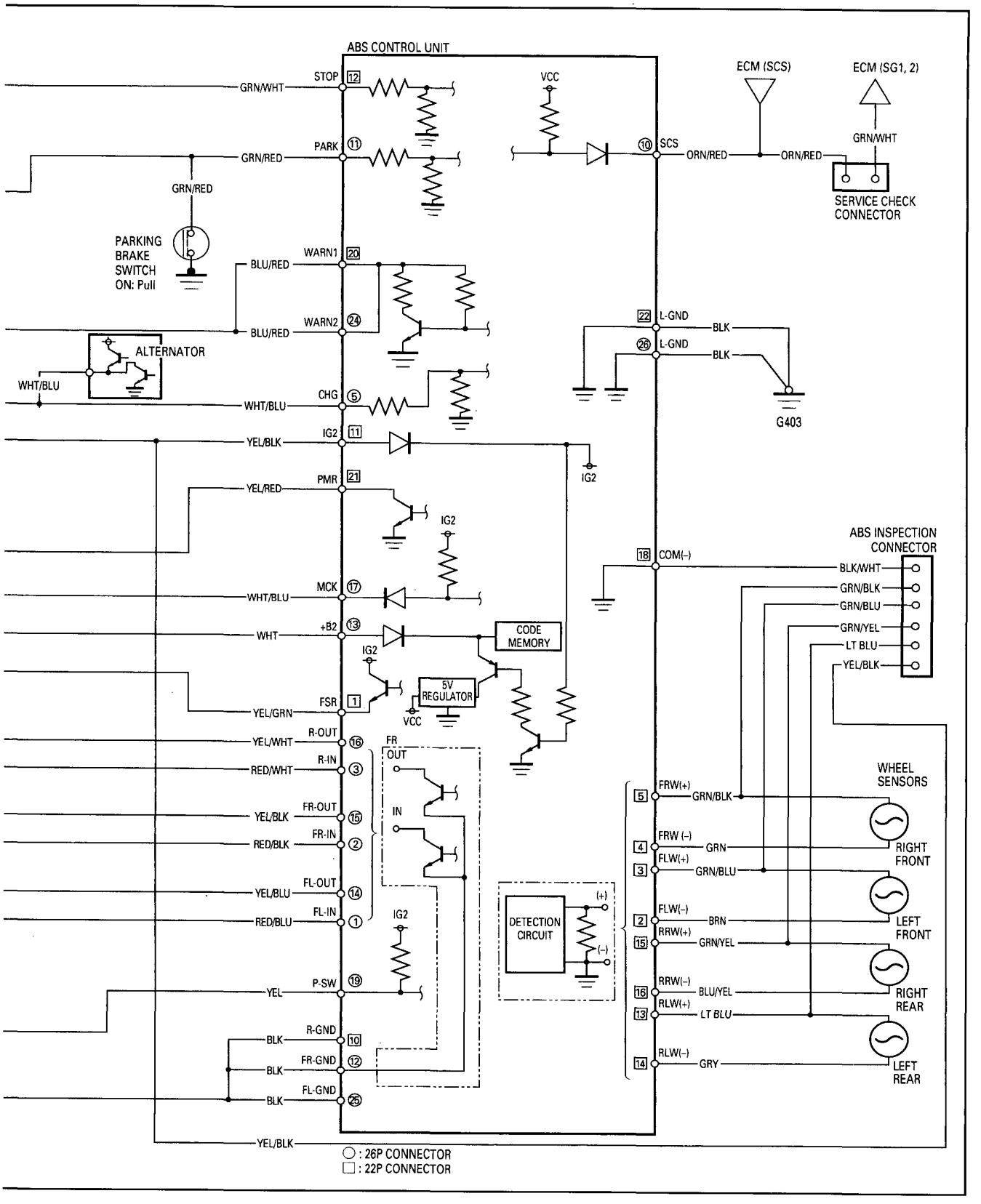
ABS CONTROL UNIT
STOP
GRN/WHT
PARK
GRN/RED
GRN/RED
PARKING BRAKE SWITCH ON: Pull
WARN1
BLU/RED
WARN2
BLU/RED
ALTERNATOR
WHT/BLU
CHG
WHT/BLU
IG2
YEL/BLK
PMR
YEL/RED
IG2
MCK
WHT/BLU
+B2
WHT
CODE MEMORY
IG2
5V REGULATOR
VCC
FSR
YEL/GRN
R-OUT
YEL/WHT
R-IN
RED/WHT
FR-OUT
YEL/BLK
FR-IN
RED/BLK
FL-OUT
YEL/BLU
FL-IN
RED/BLU
FR
OUT
IN
IG2
P-SW
YEL
R-GND
BLK
FR-GND
BLK
FL-GND
BLK
YEL/BLK
VCC
SCS
ORN/RED
ECM (SCS)
ECM (SG1, 2)
GRN/WHT
ORN/RED
SERVICE CHECK CONNECTOR
L-GND
BLK
L-GND
BLK
G403
IG2
COM(–)
ABS INSPECTION CONNECTOR
BLK/WHT
GRN/BLK
GRN/BLU
GRN/YEL
LT BLU
YEL/BLK
DETECTION CIRCUIT
(+)
(–)
FRW(+)
GRN/BLK
FRW (–)
GRN
FLW(+)
GRN/BLU
FLW(–)
BRN
RRW(+)
GRN/YEL
RRW(–)
BLU/YEL
RLW(+)
LT BLU
RLW(–)
GRY
WHEEL SENSORS
RIGHT FRONT
LEFT FRONT
RIGHT REAR
LEFT REAR
○ : 26P CONNECTOR
□ : 22P CONNECTOR

ABS Control Unit Terminal Arrangement

26P CONNECTOR

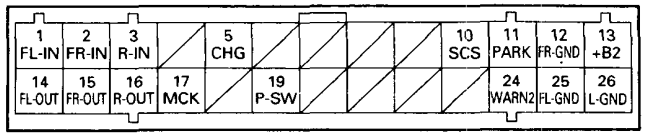

TERMINAL SIDE OF MALE TERMINALS

26P CONNECTOR

NOTE: Standard voltage is 12 V.

Terminal number	Wire color	Terminal name	Description	Signal
1	RED/BLU	FL-IN (Front-left inlet solenoid valve)	Drives left-front inlet solenoid valve.	Engine: ON — Solenoid: ON 0 V; OFF 12 V
2	RED/BLK	FR-IN (Front-right inlet solenoid valve)	Drives right-front inlet solenoid valve.	
3	RED/WHT	R-IN (Rear inlet solenoid valve)	Drives rear inlet solenoid valve.	Engine: OFF (Ignition Switch ON): 0 V
5	WHT/BLU	CHG (Charge)	Detects engine operation. (Activates ABS control unit with engine ON.)	Engine running: 12 V Engine stopped: 0 V
10	ORN/RED	SCS (Service check signal)	Detects service check connector signal (diagnostic trouble code indication).	Connected: 0 V Disconnected: 5 V
11	GRN/RED	PARK (Parking brake)	Detects parking brake switch signal. (ABS indicator light is turned on when driving with signal ON.)	ON: 0 V OFF: 12 V
12	BLK	FR-GND (Front-right solenoid valve ground)	Ground for the right-front inlet and outlet solenoid valves.	
13	WHT	+B2 (+B2 power source)	• Power source for ABS control unit control circuit. • Power source for diagnostic trouble code memory.	12 V at all times
14	YEL/BLU	FL-OUT (Front-left outlet solenoid)	Drives left-front outlet solenoid valve.	Engine: ON — Solenoid: ON 0 V; OFF 12 V
15	YEL/BLK	FR-OUT (Front-right outlet solenoid valve)	Drives right-front outlet solenoid valve.	
16	YEL/WHT	R-OUT (Rear outlet solenoid valve)	Drives rear outlet solenoid valve.	Engine: OFF (Ignition Switch ON): 0 V
17	WHT/BLU	MCK (Motor check)	Detects pump motor drive signal. (ABS indicator light is turned on if there is open or short circuit.)	Motor: ON: 12 V OFF: 0 V (Open): 12 V
19	YEL	P-SW (Pressure switch)	Detects pressure switch signal. (Switch turns ON at approx. 22,000 kPa, 220 kgf/cm², 3,100 psi and pump motor is stopped.)	ON: 0 V OFF: 12 V
24	BLU/RED	WARN 2 (Warning lamp)	Drives ABS indicator light. (Shuts off the indicator light ground circuit inside the ABS control unit to turn off the light when the system is normal.)	Light ON: 0 V Light OFF: 12 V
25	BLK	FL-GND (Front-left solenoid valve ground)	Ground for the left-front inlet and outlet solenoid valves.	
26	BLK	L-GND (Logic ground)	Ground for the ABS control unit control circuits.	

22P CONNECTOR

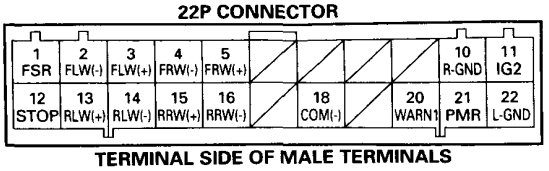

22P CONNECTOR **TERMINAL SIDE OF MALE TERMINALS**

NOTE: Standard voltage is 12 V.

Terminal number	Wire color	Terminal name	Description	Signal	
1	YEL/GRN	FSR (Fail-safe relay)	Drives fail-safe relay. (Fail-safe relay is turned OFF to shut off the power source to the solenoid when problem occurs.)	ON: 12 V OFF: 0 V	
2	BRN	FLW (–) (Front-left wheel sensor, negative)	Detects left-front wheel speed. (Ground level)	No. 2 – 3 terminals	When the wheel is turned at 1 turn/second: 70 mV or above on digital tester (AC range) (Reference) 200 mVP-P or above on oscilloscope
3	GRN/BLU	FLW (+) (Front-left wheel sensor, positive)	Detects left-front wheel speed.		
4	GRN	FRW (–) (Front-right wheel sensor, negative)	Detects right-front wheel speed. (Ground level)	No. 4 – 5 terminals	
5	GRN/BLK	FRW (+) (Front-right wheel sensor, positive)	Detects right-front wheel speed.		
10	BLK	R-GND (Rear solenoid valve ground)	Ground for rear inlet and outlet solenoid valves.		
11	YEL/BLK	IG2 (IG2 power source)	Detects ignition switch IG2 signal. (When IG2 is input, +B2 power source is switched to the power source for the ABS control unit (Vcc). Also IG2 monitors P-SW and MCK lines, and drives fail-safe relay.)	ON: 12 V OFF: 0 V	
12	GRN/WHT	STOP (Foot brake)	Detects brake switch signal. (Prevents unnecessary ABS operation when the brake pedal is not depressed)	ON: 12 V OFF: 0 V	
13	LT BLU	RLW (+) (Rear-left wheel sensor, positive)	Detects left-rear wheel speed.	No. 13 – 14 terminals	When the wheel is turned at 1 turn/second: 70 mV or above on digital tester (AC range) (Reference) 200 mVP-P or above on oscilloscope
14	GRY	RLW (–) (Rear-left wheel sensor, negative)	Detects left-rear wheel speed. (Ground level)		
15	GRN/YEL	RRW (+) (Rear-right wheel sensor, positive)	Detects right-rear wheel speed.	No. 15 – 16 terminals	
16	BLU/YEL	RRW (–) (Rear-right wheel sensor, negative)	Detects right-rear wheel speed. (Ground level)		
18	BLK/WHT	COM (–) (Common negative)	Ground for ALB checker when it is connected.		
20	BLU/RED	WARN 1 (Warning lamp)	Drives ABS indicator light. (Shuts off the indicator light ground circuit inside the ABS control unit to turn off the light when the system is normal.)	Light ON: 0 V Light OFF: 12 V	
21	YEL/RED	PMR (Pump motor relay)	Drives pump motor relay. (Pump motor relay is turned ON to drive the pump motor when P-SW OFF signal is detected.)	ON: 0 V OFF: 12 V	
22	BLK	L-GND (Logic ground)	Ground for the ABS control unit control circuits.		

Troubleshooting Precautions

ABS Indicator Light:

The ABS indicator light comes on for three seconds and then goes off when the control unit detects no problem during the initial diagnosis right after the engine starts.
However, the ABS indicator light can stay on for up to 40 seconds when the control unit starts to check for pump overrun, etc. during the initial diagnosis.
The ABS indicator light comes on, and the ABS control unit memorizes the diagnostic trouble code (DTC) under certain conditions.

- The parking brake is applied for more than 30 seconds while the vehicle is being driven. (DTC 2-1)
- The transmission downshifted excessively. (DTC 4-1, 4-2)
- The vehicle loses traction, and the front wheels spin for more than one minute when starting from a stuck condition on a muddy, snowly, or sandy road. (DTC 4-8)
- The tires adhesion is lost due to excessive cornering speed. (DTC 5, 5-4, 5-8)
- The vehicle is driven on an extremely rough road. (DTC 8-1)
- The vehicle is interfered by strong radio waves (noise), for example, illegal radio, etc. (DTC 8-2)

NOTE: If there is any trouble in the system, the ABS indicator light turns on during driving.

Diagnostic Trouble Code (DTC):

- When the control unit detects a problem and the ABS indicator light comes on, the control unit memorizes the DTC.
- The control unit has three memory registers. When a problem occurs, the control unit stores the DTC in the first memory register. If another problem occurs, or the same problem occurs again, the control unit moves the first DTC to the next memory register, and stores the second DTC in the first register. If there's a third problem occurrence, the two existing DTCs are moved up one register, and the third DTC is stored in the first register. If problems continue to occur, the oldest problem is moved out of the last register and lost, and the most recent problem is stored in the first register. When the same problem occurs three times, the same DTC is stored in all memory registers.
- The most recent DTC is indicated first, and the oldest DTC is indicated last.
- The DTCs are erased from the control unit when the ABS control unit +B2 power supply or connector is disconnected.
- The control unit's memory can be erased by disconnecting the ABS B2 fuse for more than three seconds.

Self-diagnosis:

- There are three self-diagnosises described below.
  ① Initial diagnosis: Performed right after the engine starts until the ABS indicator light goes off.
  ② Regular diagnosis: Continuously performed (under some conditions) after the ABS indicator light goes off until the engine stops.
  ③ Individual part/system diagnosis: Diagnosis about a specific part/system under its operating conditions.
- The CPU (central processing unit) controls the following when it detects a problem during self-diagnosis:
  ① Turns the ABS indicator light ON.
  ② Turns the front and rear fail-safe relays off.
  ③ Stops the ABS control.
  ④ Stops the ABS pump. (The pump may work under some conditions.)

Kickback and Pump Operation:

- When the engine is started, the ABS control unit begins the initial diagnosis and operates the solenoid valve one time. The kickback may be felt when the brake pedal is depressed.
- When the ABS control unit detects the pressure switch OFF signal during the initial diagnosis, it operates the pump motor, and performs the pump motor over-run diagnosis and pump motor diagnosis. Therefore, there are two cases where the pump motor operates or does not operate after the engine is started.
- Normally, after the initial diagnosis, the pump motor operates based on the pressure switch signal, regardless of the vehicle speed.

Troubleshooting:

- When two or three DTCs are stored in the control unit, perform troubleshooting for the DTC that appears first.
- When a customer's reported problem cannot be verified on the car, ask the customer about the conditions when the ABS indicator light came ON, and test drive the car under those conditions, if possible. When the ABS indicator light does not come ON during the test, check for loose terminals and check by shaking the harnesses and connectors while following the flowchart.
- The connector terminal numbers are viewed from the wire side for the female terminals, and from the terminal side for the male terminals.

Diagnostic Trouble Code (DTC) Indication

1. Connect the SCS short connector to the service check connector located on the side kick panel of the passenger's seat side.

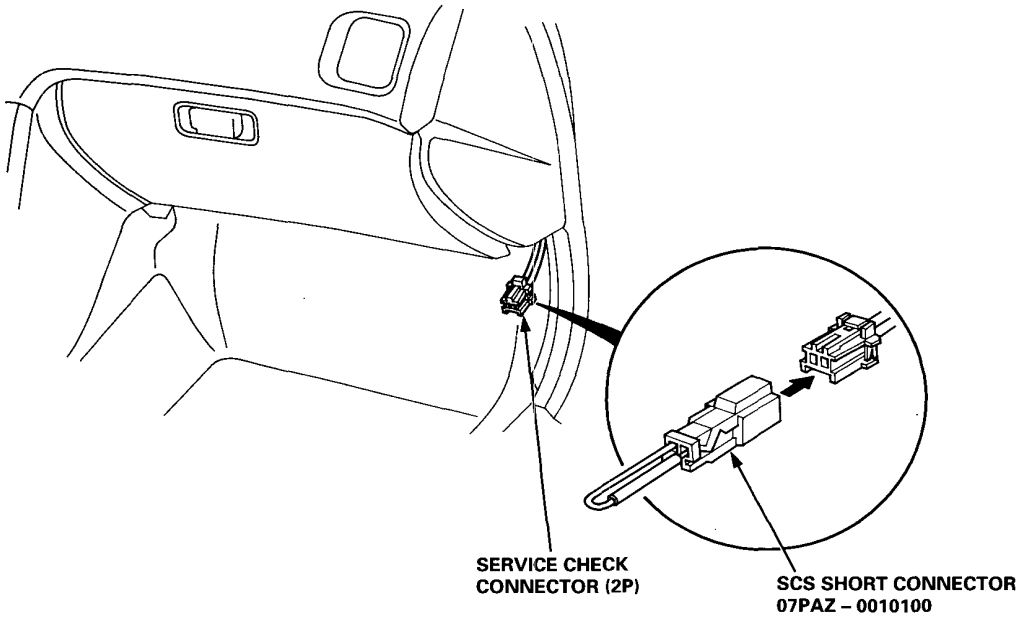

2. Turn the ignition switch ON, but do not start the engine.

3. Record the blinking frequency of the ABS indicator light. The blinking frequency indicates the diagnostic trouble code (DTC).

   NOTE: Check the DTC carefully and record it. The memory of the DTC is erased if the connector is disconnected from the ABS control unit.

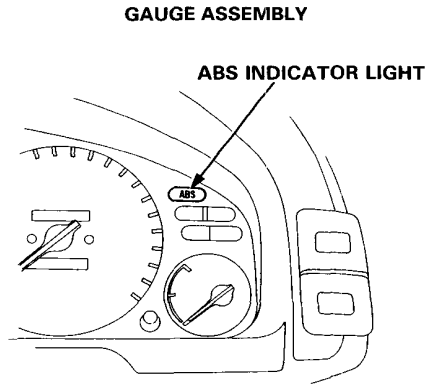

DTC Indication Pattern:

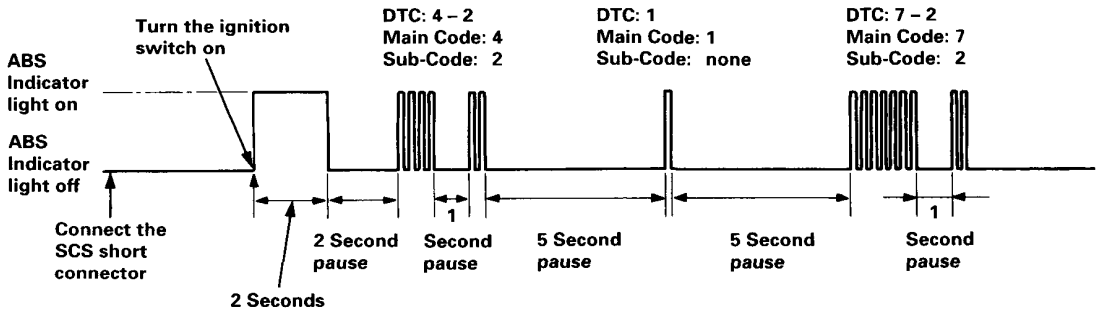

- Turn the ignition switch ON. The ABS indicator light comes on for two seconds to check the bulb.
- The ABS control unit can memorize three DTCs (one, two or three problems).
- If you miscount the blinking frequency or if you recheck the blinking frequency, turn the ignition switch OFF then turn it ON to cycle the ABS indicator light again.

4. Remove the SCS short connector.

   NOTE: The Malfunction Indicator Lamp (MIL) will stay on after the engine is started if the SCS short connector is connected.

5. Remove the ABS B2 (15 A) fuse in the under-hood ABS fuse/relay box for at least three seconds to erase the ABS control unit's memory.

Symptom-to-System Chart

DIAGNOSTIC TROUBLE CODE (DTC)		DIAGNOSIS/ SYMPTOM	DIAGNOSTIC PERIOD			PROBLEM LOCATION	PROBABLE CAUSE
MAIN CODE	SUB-CODE		INITIAL DIAGNOSIS	INDIVIDUAL DIAGNOSIS	REGULAR DIAGNOSIS		
—		ABS indicator light does not come on when ignition switch is turned ON					• Blown TURN SIGNALS/BACK-UP LIGHTS (10 A) fuse • Open circuit between the TURN SIGNALS/BACK-UP LIGHTS (10 A) fuse and ABS indicator light • Blown ABS indicator light bulb • Open circuit between the ABS indicator light and ABS control unit • Open circuit between the ABS control unit and body ground • Poor body ground • Faulty ABS control unit
		ABS indicator light does not go off after engine is started					• Blown HEATER CONTROL RELAY/REAR DEFROSTER RELAY (7.5 A) fuse • Open circuit between the under-dash fuse/relay box and ABS control unit. • Open circuit between the battery and under-hood ABS fuse/relay box • Blown ABS B2 (15 A) fuse • Open circuit inside the under-hood ABS fuse/relay box • Open circuit between the under-hood ABS fuse/relay box and ABS control unit • Faulty alternator • Open circuit between the alternator and ABS control unit • Short to body ground in the WARN circuit between the ABS indicator light and ABS control unit • Faulty ABS control unit
1	—	ABS pump motor over-run	○	○			• Pressure switch stuck OFF • Air mixed in the high pressure fluid • Open circuit between the pressure switch and ABS control unit • Open circuit in the P-SW circuit between the pressure switch and body ground, or a poor ground • Drop in pump discharge volume • Leaking outlet valve • Leaking relief valve • ABS brake fluid leakage • Faulty ABS control unit
	2	Pump motor	○		○		• Open circuit or short to body ground between the HEATER CONTROL RELAY/REAR DEFROSTER RELAY (7.5 A) fuse and under-hood ABS fuse/relay box • Open circuit or short to body ground in the PMR circuit inside the under-hood ABS fuse/relay box • Faulty pump motor relay • Open circuit or short to body ground in the PMR circuit between the under-hood ABS fuse/relay box and ABS control unit • Open circuit between the battery and under-hood ABS fuse/relay box • Blown ABS MOTOR (40 A) fuse • Blown MTR CHK (7.5 A) fuse • Open circuit or short to body ground in the motor drive circuit and MCK circuit inside the under-hood ABS fuse/relay box • Open circuit or short to body ground in the MCK circuit between the under-hood ABS fuse/relay box and ABS control unit • Open circuit or short to body ground between the under-hood ABS fuse/relay box and pump motor • Faulty pump motor • Open circuit between the pump motor and body ground or poor ground • Faulty ABS control unit
	3	High pressure leakage			○		• Leaking outlet valve • Leaking relief valve • Poor contact in pressure switch circuit
	4	Pressure switch	○				• Short to body ground between the ABS control unit and pressure switch • Pressure switch stuck ON • Faulty ABS control unit
	8	High pressure system	○				• Accumulator gas leakage • Changed relief valve set pressure • Rear outlet solenoid valve late to close • Changed pressure switch set pressure
2	1	Parking brake			○		• Low fluid level in the master cylinder reservoir • Open circuit between the TURN SIGNALS/BACK-UP LIGHTS (10 A) fuse and brake system light • Blown brake system light bulb • Open circuit or short to body ground between the brake system light and ABS control unit • Parking brake switch stuck ON • Short to body ground between the brake system light and parking brake switch • Brake fluid level switch stuck ON • Short to body ground between the brake system light and brake fluid level switch • Faulty ABS control unit

PROBABLE CAUSE WHEN SYMPTOM DOES NOT REAPPEAR	DESCRIPTION OF DIAGNOSIS	REFER TO PAGE
		19-26
		19-28
	• The ABS indicator light is turned ON when the pump motor relay ON signal is detected for more than 40 seconds while the ABS is not functioning.	19-31
• Intermittent interruption in the MCK circuit • Intermittent interruption in the pump motor relay drive circuit • Intermittent interruption in the pump motor drive circuit	• The ABS indicator light is turned on when battery voltage is detected at the MCK terminal while the pump motor relay OFF signal is detected. • The ABS indicator light is turned on when the 0 V is detected at the MCK terminal while the pump motor relay ON signal is detected.	19-33
• Intermittent interruption in the pressure switch • Intermittent interruption in the pressure switch circuit	• The ABS indicator light is turned on when the frequent ON/OFF cycle of the pressure switch signal after the engine is started, until it is stopped. The count is erased when the ABS functions.	19-39
	• The ABS indicator light is turned on when the pressure switch ON signal is always detected at every initial diagnosis. The count is erased when the ABS control unit detects the pressure switch OFF signal.	19-41
• The ABS indicator light may not come on in normal climate when it comes on in very cold climate.	• This diagnosis is performed when the pressure switch is OFF at the initial diagnosis. The pump motor is operated to turn the pressure switch ON, then the solenoid valve is momentarily activated. The ABS indicator light is turned on if the pressure switch signal changes from ON to OFF.	19-42
• Driving with the parking brake applied—(No problem)	• The ABS indicator light is turned on when the parking brake ON signal is detected for more than 30 seconds while driving.	19-43

(cont'd)

Symptom-to-System Chart (cont'd)

DIAGNOSTIC TROUBLE CODE (DTC) MAIN CODE	DIAGNOSTIC TROUBLE CODE (DTC) SUB-CODE	DIAGNOSIS/ SYMPTOM	DIAGNOSTIC PERIOD: INITIAL DIAGNOSIS	DIAGNOSTIC PERIOD: INDIVIDUAL DIAGNOSIS	DIAGNOSTIC PERIOD: REGULAR DIAGNOSIS	PROBLEM LOCATION	PROBABLE CAUSE
3	1	Pulser			○	Right-front	• Chipped pulser gear • Improperly installed wheel sensor
	2					Left-front	
	4					Right-rear	
	8					Left-rear	
	12	Different diameter tire			○		• Different diameter tire installed
4	1	Wheel sensor		○	○	Right-front	• Open circuit, internal short or short to body ground in the wheel sensor • Open circuit or short to body ground in the positive (+) wire between the wheel sensor and ABS control unit • Open circuit or short to body ground in the negative (−) wire between the wheel sensor and ABS control unit • Positive (+) wire shorted to the negative (−) wire between the wheel sensor and ABS control unit • Loose connector or poor contact of terminals • Improper wheel sensor air gap • Faulty ABS control unit • Missing pulser • Modulator does not decrease pressure properly
	2					Left-front	
	4					Right-rear	
	8					Left-rear	
5	—	Rear wheel lock			○	Right/ Left	• Open circuit, internal short or short to body ground in the wheel sensor system • Rear brake drag • Modulator does not decrease pressure properly • Faulty ABS control unit
	4					Right	
	8					Left	
6	—	Fail-safe relay	○			Front/ rear	• Short to power in the relay drive circuit between the fail-safe relay and ABS control unit • Faulty relay drive transistor (ON) in the ABS control unit • Fail-safe relay stuck ON • Short to power in the solenoid drive circuits between the fail-safe relay and ABS control unit
	1					Front	
	4					Rear	
7	1	Solenoid	○		○	Right-front	• Fail-safe relay stuck OFF • Open circuit in the solenoid drive circuit between the under-hood ABS fuse/relay box and ABS control unit • Short to body ground in the solenoid drive circuit between the solenoid and ABS control unit • Faulty solenoid drive transistor (ON) in the ABS control unit • Short to power in the solenoid drive circuit between the solenoid and ABS control unit • Faulty solenoid drive transistor (OFF) in the ABS control unit • Short to power in the drive circuit inside the solenoid • Short to the outlet circuit in the inlet circuit between the solenoid and ABS control unit
	2					Left-front	
	4					Rear	
8	1	ABS function			○		• Wheel sensor signal disappears at speeds of 6 mph (10 km/h) or less • Faulty ABS control unit
	2	CPU comparison	○		○		• Faulty ABS control unit
	4	IC [Integrated Circuit]	○		○		• Faulty ABS control unit

PROBABLE CAUSE WHEN SYMPTOM DOES NOT REAPPEAR	DESCRIPTION OF DIAGNOSIS	REFER TO PAGE
• Intermittent interruption in the wheel sensor	• The ABS indicator light is turned on when the wheel sensor signal is periodically missing during driving.	19-47
(•No problem)	• The ABS indicator light may be turned on while driving when one, two or three different diameter tires are installed. This diagnosis is not performed when the parking brake switch is ON.	19-47
• Intermittent interruption in the wheel sensor • Wheel spin of both front wheels (only for DTC 4-8)—(No problem) • The transmission downshifted excessively (only for DTC 4-1 and 4-2)—(No problem)	• The ABS indicator light is turned on when the wheel sensor signal is missing at speeds of 6 mph (10 km/h) or more. This diagnosis is not performed when the parking brake switch is ON.	19-48 19-51 19-54 19-57
• Intermittent interruption in the wheel sensor • Wheel spin by operating the parking brake while the parking brake switch is stuck OFF • Car spun-out—(No problem)	• The ABS indicator light is turned on when either or both rear wheels lock and the wheel sensor signal is missing during driving. This diagnosis is not performed when the parking brake switch is ON.	19-60
	• The ABS indicator light is turned on when battery voltage is detected at the solenoid terminal before the fail-safe relays are turned on at the initial diagnosis.	19-62 19-64 19-67
• Intermittent interruption in the solenoid valve drive circuit • Intermittent interruption in the solenoid valve ground circuit • Intermittent interruption in the fail-safe relay circuit	• Each solenoid valve is momentarily activated at the initial diagnosis and when the car starts off. The ABS indicator light is turned on when battery voltage is detected at the solenoid terminal. • The ABS indicator light is turned on when 0V is detected at the solenoid terminal while the solenoid OFF signal is detected at the regular diagnosis.	19-69 19-73 19-80
• Intermittent interruption in the wheel sensor • Rough road driving—(No problem)	• The ABS indicator light is turned on when the ABS functions continuously.	19-87
(•No problem)	• The ABS indicator light is turned on when there is a difference between the CPU data.	19-88
(•No problem)	• The ABS indicator light is turned on when there is a abnormality in the IC at the regular diagnosis.	19-88

ABS Indicator Light Does Not Come On

The ABS indicator light does not come on when the ignition switch is turned ON.

When the ignition switch is turned ON, the ABS indicator light drive transistor in the ABS control unit is activated by self-bias and turns the ABS indicator light on.
Possible causes for an ABS indicator light that does not come on:

- Blown TURN SIGNALS/BACK-UP LIGHTS (10 A) fuse
- Open circuit between the TURN SIGNALS/BACK-UP LIGHTS (10 A) fuse and ABS indicator light.
- Blown ABS indicator light bulb
- Open circuit between the ABS indicator light and ABS control unit
- Open circuit between the ABS control unit and body ground
- Poor body ground
- Faulty ABS control unit

The ABS indicator light does not come on when the ignition switch is turned ON.

Check the TURN SIGNALS/BACK-UP LIGHTS (10 A) fuse in the under-dash fuse/relay box.

NOTE: All indicator lights except the charging system indicator light will not come on when the TURN SIGNALS/BACK-UP LIGHTS (10 A) fuse is blown.

Is the fuse OK?

NO → **Replace the fuse and recheck.**

NOTE: Reinstall the fuse if it is OK.

YES

Disconnect the gauge assembly 14P connector.

Turn the ignition switch ON.

Measure the voltage between the gauge assembly 14P connector No. 7 (YEL) terminal and body ground.

GAUGE ASSEMBLY 14P CONNECTOR

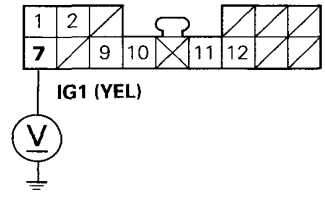

WIRE SIDE OF FEMALE TERMINALS

Is there battery voltage?

NO →
- **Repair open in the YEL wire between the TURN SIGNALS/BACK-UP LIGHTS (10 A) fuse and gauge assembly.**
- **Replace the under-dash fuse/relay box. (Open circuit inside the fuse/relay box)**

YES

Check the ABS indicator light bulb in the gauge assembly.

Is the bulb OK?

NO → **Replace the ABS indicator light bulb.**

YES

(To page 19-27)

(From page 19-26)

Connect the gauge assembly 14P connector.

Connect the gauge assembly 14P connector No. 12 (BLU/WHT) terminal to body ground.

Does the ABS indicator light come on?

- NO → **Replace the printed circuit board in the gauge assembly.**
- YES ↓

Turn the ignition switch OFF.

Disconnect the ABS control unit 22P and 26P connectors.

Turn the ignition switch ON.

Connect the ABS control unit 22P connector No. 20 (BLU/RED) terminal or 26P connector No. 24 (BLU/RED) terminal to body ground.

Does the ABS indicator light come on?

- NO → **Repair open in the BLU/RED wire between the gauge assembly and ABS control unit.**
- YES ↓

Connect the ABS control unit 22P and 26P connectors.

Connect the ABS control unit 22P connector No. 22 (BLK) terminal or 26P connector No. 26 (BLK) terminal to body ground.

Does the ABS indicator light come on?

- YES → **• Repair open in the two BLK wires between the ABS control unit and body ground.**
  • Repair poor ground (G403).
- NO ↓

Check for loose ABS control unit connectors. If necessary, substitute a known-good ABS control unit and recheck.

GAUGE ASSEMBLY 14P CONNECTOR

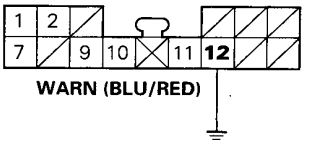

WIRE SIDE OF FEMALE TERMINALS

ABS CONTROL UNIT 22P CONNECTOR

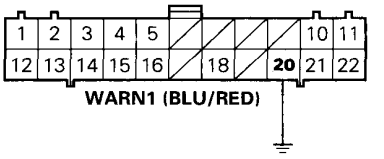

ABS CONTROL UNIT 26P CONNECTOR

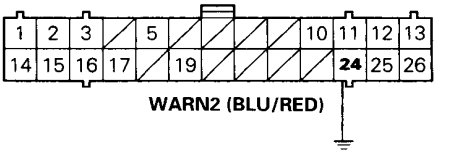

WIRE SIDE OF FEMALE TERMINALS

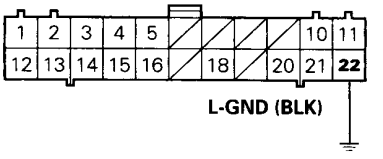

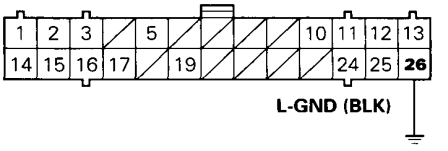

ABS Indicator Light Does Not Go Off

The ABS indicator light does not go off after the engine is started

When no problem is found during the initial diagnosis, the ABS control unit turns the ABS indicator light drive transistor off to turn the ABS indicator light off.
Possible causes for an ABS indicator light that does not go off, but no Diagnostic Trouble Code (DTC) is indicated:

- Blown HEATER CONTROL RELAY/REAR DEFROSTER RELAY (7.5 A) fuse
- Open circuit between the under-dash fuse/relay box and ABS control unit
- Open circuit between the battery and under-hood ABS fuse/relay box
- Blown ABS B2 (15 A) fuse
- Open circuit inside the under-hood ABS fuse/relay box
- Open circuit between the under-hood ABS fuse/relay box and ABS control unit
- Faulty alternator
- Open circuit between the alternator and ABS control unit
- Short to body ground in the WARN circuit between the ABS indicator light and ABS control unit
- Faulty ABS control unit

— With engine running, ABS indicator light is ON.
— With the SCS short connector connected (see page 19-20), no DTC is indicated.

Start the engine and check the charging system indicator light.

Does it go off?
- NO → **Check the charging system (refer to section 23 in the shop manual '93 ACCORD (Code No. 62SN700)).**
- YES ↓

Turn the ignition switch OFF.

Check the HEATER CONTROL RELAY/REAR DEFROSTER RELAY (7.5 A) fuse in the under-dash fuse/relay box.

NOTE: The IG2 power source is checked in this step.

Is the fuse OK?
- NO → **Replace the fuse and recheck.**
- YES ↓

Check the ABS B2 (15 A) fuse in the under-hood ABS fuse/relay box.

Is the fuse OK?
- NO → **Replace the fuse and recheck.**
- YES ↓

(To page 19-29) NOTE: Reinstall the fuse if it is OK.

UNDER-HOOD ABS FUSE/RELAY BOX

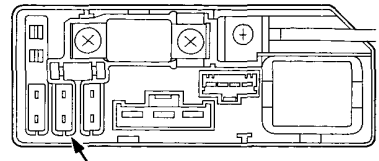

ABS B2 (15 A) FUSE

(From page 19-28)

Measure the voltage between the under-hood ABS fuse/relay box +B terminal and body ground.

NOTE: The +B2 line is checked from this step.

Is there battery voltage?

- NO → **Repair open in the BLK wire between the battery and under-hood ABS fuse/relay box.**
- YES ↓

Measure the voltage between the under-hood ABS fuse/relay box 3P connector No. 1 (WHT) terminal and body ground.

Is there battery voltage?

- NO → **Replace the under-hood ABS fuse/relay box.**
- YES ↓

Disconnect the ABS control unit 22P and 26P connectors.

Measure the voltage between the ABS control unit 26P connector No. 13 (WHT) terminal and body ground.

Is there battery voltage?

- NO → **Repair open in the WHT wire between the under-hood ABS fuse/relay box and ABS control unit.**
- YES ↓

Turn the ignition switch ON.

NOTE: The WARN line is checked in this step with the ABS control unit connectors disconnected.

Does the ABS indicator light come on?

- YES → **Repair short to body ground in the BLU/RED wire between the ABS indicator light and ABS control unit.**
- NO ↓

(To page 19-30)

UNDER-HOOD ABS FUSE/RELAY BOX

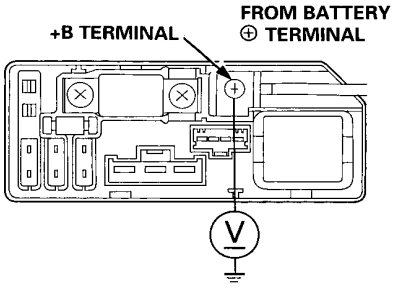

UNDER-HOOD ABS FUSE/RELAY BOX 3P CONNECTOR

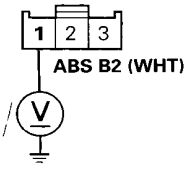

WIRE SIDE OF FEMALE TERMINALS

ABS CONTROL UNIT 26P CONNECTOR

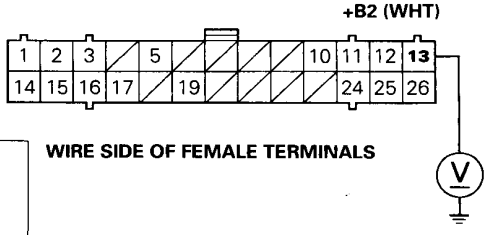

WIRE SIDE OF FEMALE TERMINALS

(cont'd)

ABS Indicator Light Does Not Go Off (cont'd)

(From page 19-29)

Measure the voltage between the ABS control unit 22P connector No. 11 (YEL/BLK) terminal and body ground.

NOTE: The IG2 line is checked in this step.

Is there battery voltage?

NO → **Repair open in the YEL/BLK wire between the HEATER CONTROL RELAY/REAR DEFROSTER RELAY (7.5 A) fuse in the under-dash fuse/relay box and ABS control unit.**

YES

Start the engine.

Measure the voltage between the ABS control unit 26P connector No. 5 (WHT/BLU) terminal and body ground.

NOTE: The CHG line is checked in this step.

Is there battery voltage?

NO → **Repair open in the WHT/BLU wire between the alternator and ABS control unit.**

YES

Check for loose ABS control unit connectors. If necessary, substitute a known-good ABS control unit and recheck.

ABS CONTROL UNIT 22P CONNECTOR

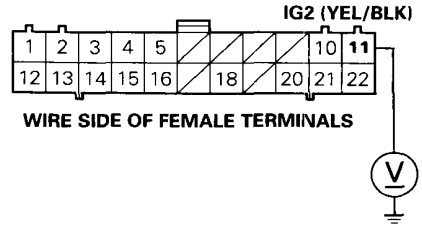

ABS CONTROL UNIT 26P CONNECTOR

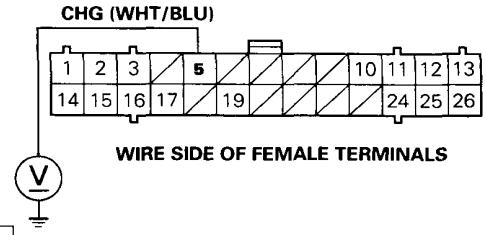

ABS Pump Motor Over-run

Diagnostic Trouble Code (DTC) 1: ABS Pump Motor Over-run

NOTE: The ABS indicator light comes on twice; once for two seconds during the bulb check, then again, indicating DTC 1.

The ABS control unit monitors the pump motor relay drive signal during the initial diagnosis and individual diagnosis when the ABS is not functioning.
When the ABS control unit detects the drive signal for 40 seconds, it turns the pump motor relay off and keeps the ABS indicator light on. When the ABS control unit detects the drive signal for 40 seconds after the ABS indicator light went off, the control unit turns the ABS indicator light on again.
Possible causes:

- Pressure switch stuck OFF
- Air mixed in the high pressure fluid
- Open circuit between the pressure switch and ABS control unit
- Open circuit in the P-SW circuit between the pressure switch and body ground, or a poor ground
- Drop in pump discharge volume
- Leaking outlet valve
- Leaking relief valve
- Brake fluid leakage on the ABS operation system
- Faulty ABS control unit

— With engine running, ABS indicator light is ON.
— With the SCS short connector connected (see page 19-20), DTC 1 is indicated.

Start the engine and let it run for 1 minute.

Does the pump motor run for 40 seconds and does the ABS indicator light come on?

NO → **The vehicle is OK at this time.**

YES

Turn the ignition switch OFF.

Check the reservoir fluid level.

Is the level OK?

NO → **Replace the modulator nuit. (Brake fluid leakage)**

YES

Bleed high pressure fluid of air. (see page 19-92)

Restart the engine and let it run for 1 minute.

Does the pump motor run for 40 seconds and does the ABS indicator light come on?

NO → **Air mixed in the high pressure fluid.**

YES

(To page 19-32)

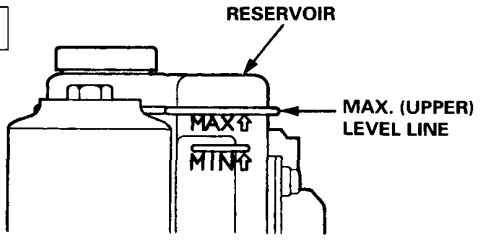

(cont'd)

ABS Pump Motor Over-run (cont'd)

(From page 19-31)

Turn the ignition switch OFF.

Disconnect the modulator unit 14P connector.

Check for continuity between the modulator unit 14P connector No. 4 (YEL) and No. 11 (BLK) terminals.

Is there continuity?

NO → **Replace the modulator unit.**
- **Pressure switch stuck OFF**
- **Drop in pump discharge volume**
- **Leaking outlet valve**
- **Leaking releif valve**

YES

Turn the ignition switch ON.

Measure the voltage between the modulator unit 14P connector No. 4 (YEL) terminal and body ground.

Is there battery voltage?

YES → **Repair open in the BLK wire between the pressure switch and body ground, or poor ground.**

NO

Measure the voltage between the ABS control unit 26P connector No. 19 (YEL) terminal and body ground.

Is there battery voltage?

YES → **Repair open in YEL wire between the pressure switch and ABS control unit.**

NO

Check for loose ABS control unit connectors. If necessary, substitute a known-good ABS control unit and recheck.

MODULATOR UNIT 14P CONNECTOR

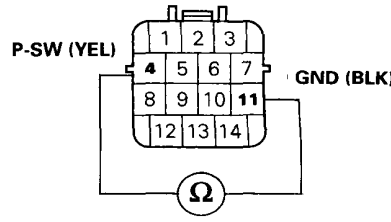

WIRE SIDE OF FEMALE TERMINALS

MODULATOR UNIT 14P CONNECTOR

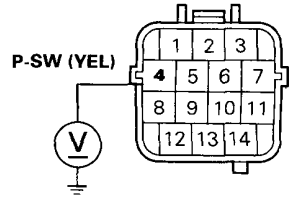

TERMINAL SIDE OF MALE TERMINALS

ABS CONTROL UNIT 26P CONNECTOR

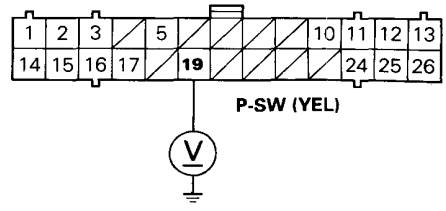

WIRE SIDE OF FEMALE TERMINALS

ABS Pump Motor

Diagnostic Trouble Code (DTC) 1-2: ABS Pump Motor Diagnosis

The ABS control unit checks the conditions at the pump motor relay drive (PMR) terminal and motor check (MCK) terminal during the initial diagnosis and regular diagnosis.
When the ABS control unit detects the following conditions during the diagnosis, it keeps the ABS indicator light on.
When the following conditions are detected after the ABS indicator light goes off, the ABS control unit turns the ABS indicator light on again.

- Battery voltage at the MCK terminal with an OFF signal at the PMR terminal
- 0 V at the MCK terminal with an ON signal at the PMR terminal

Possible causes:

- Open circuit or short to body ground between the HEATER CONTROL RELAY/REAR DEFROSTER RELAY (7.5 A) fuse and under-hood ABS fuse/relay box
- Open circuit or short to body ground in the PMR circuit inside the under-hood ABS fuse/relay box
- Faulty pump motor relay
- Open circuit or short to body ground in the PMR circuit between the under-hood ABS fuse/relay box and ABS control unit
- Open circuit between the battery and under-hood ABS fuse/relay box
- Blown ABS MOTOR (40 A) fuse
- Blown MTR CHK (7.5 A) fuse
- Open circuit or short to body ground in the motor drive circuit and MCK circuit inside the under-hood ABS fuse/relay box
- Open circuit or short to body ground in the MCK circuit between the under-hood ABS fuse/relay box and ABS control unit
- Open circuit or short to body ground between the under-hood ABS fuse/relay box and pump motor
- Faulty pump motor
- Open circuit between the pump motor and body ground or poor ground
- Faulty ABS control unit

— With engine running, ABS indicator light is ON.
— With the SCS short connector connected (see page 19-20), DTC 1-2 is indicated.

Check the ABS MOTOR (40 A) fuse in the under-hood ABS fuse/relay box.

Is the fuse OK?
- NO → **Replace the fuse and recheck.**
- YES ↓

Check the MTR CHK (7.5 A) fuse in the under-hood ABS fuse/relay box.

Is the fuse OK?
- NO → **Replace the fuse and recheck.**
- YES ↓

NOTE: Reinstall the fuse if it is OK.

(To page 19-34)

UNDER-HOOD ABS FUSE/RELAY BOX

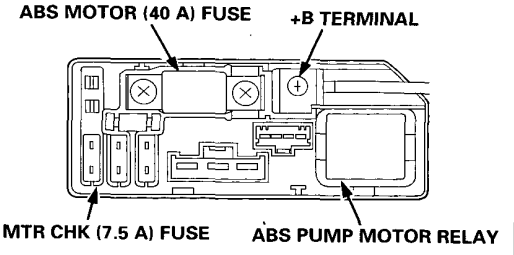

(cont'd)

ABS Pump Motor (cont'd)

(From page 19-33)

Remove the ABS pump motor relay and check it *.

* Refer to page 19-107 in the shop manual '93 ACCORD (Code No. 62SN700).

Is the relay OK?

NO → **Replace the ABS pump motor relay.**

NOTE: If the relay is stuck ON, the motor may be damaged.
Check the pump motor operation.

YES

Bleed high pressure fluid from the modulator unit bleed screw (see page 19-92).

Connect the ABS pump motor relay connector +B and MOTOR terminals with a jumper wire for 1 second.

NOTE: Use a jumper wire with a diameter larger than 2 mm (0.08 in).

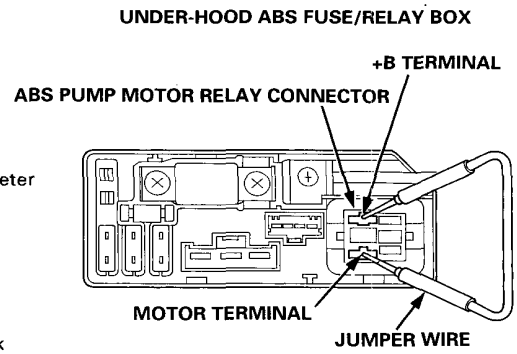

Does the pump motor run?

NO → (To page 19-36)
To pump motor drive circuit check

YES

Remove the jumper wire.

Disconnect the under-hood ABS fuse/relay box 3P connector.

Turn the ignition switch ON.

Measure the voltage between the under-hood ABS fuse/relay box 3P connector No. 2 (WHT/BLU) terminal and body ground.

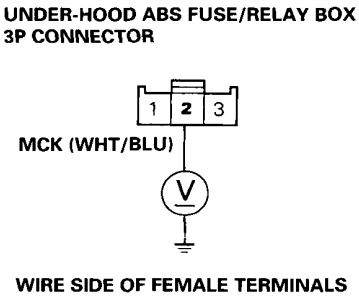

Is there battery voltage?

NO → (To page 19-37)
To motor check (MCK) circuit check

YES

(To page 19-35)

(From page 19-34)

Measure the voltage between the under-hood ABS fuse/relay box 4P connector No. 1 (YEL/BLK) terminal and body ground.

NOTE: The ABS pump motor relay coil circuit is checked beginning with this step.

UNDER-HOOD ABS FUSE/RELAY BOX 4P CONNECTOR

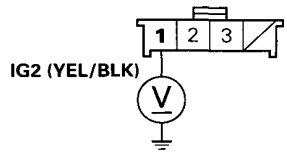

WIRE SIDE OF FEMALE TERMINALS

Is there battery voltage?

NO → **Repair open in the YEL/BLK wire between the HEATER CONTROL RELAY/REAR DEFROSTER RELAY (7.5 A) fuse in the under-dash fuse/relay box and the under-hood ABS fuse/relay box.**

YES

Connect the under-hood ABS fuse/relay box 3P connector.

Install the ABS pump motor relay.

Does the ABS pump motor relay operate?

YES → (To page 19-38) To short to body ground check of the ABS pump motor relay coil circuit

NO

Measure the voltage between the under-hood ABS fuse/relay box 4P connector No. 3 (YEL/RED) terminal and body ground.

NOTE: Open circuit in the ABS pump motor relay coil circuit is checked beginning with this step.

UNDER-HOOD ABS FUSE/RELAY BOX 4P CONNECTOR

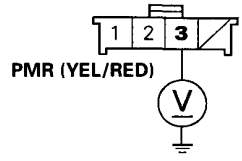

WIRE SIDE OF FEMALE TERMINALS

Is there battery voltage?

NO → **Replace the under-hood ABS fuse/relay box. (Open circuit inside the box)**

YES

Measure the voltage between the ABS control unit 22P connector No. 21 (YEL/RED) terminal and body ground.

ABS CONTROL UNIT 22P CONNECTOR

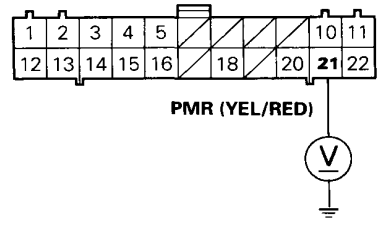

WIRE SIDE OF FEMALE TERMINALS

Is there battery voltage?

NO → **Repair open in the YEL/RED wire between the under-hood ABS fuse/relay box and ABS control unit.**

YES

Reconnect the connectors properly, bleed high pressure fluid and start the engine. If DTC 1-2 is stored again, replace the ABS control unit.

NOTE: Add the brake fluid if the fluid level is lower than the MIN line.

(cont'd)

ABS Pump Motor (cont'd)

(From page 19-34)

Measure the voltage between the under-hood ABS fuse/relay box battery +B terminal and body ground.

NOTE: The ABS pump motor drive circuit is checked beginning with this step.

Is there battery voltage?

- NO → **Repair open in the BLK wire between the battery and under-hood ABS fuse/relay box.**
- YES ↓

Measure the voltage between the under-hood ABS fuse/relay box 3P connector No. 3 (WHT/BLU) terminal and body ground.

NOTE: Connect the ABS pump motor relay connector +B and MOTOR terminals with a jumper wire.

Is there battery voltage?

- NO → **Replace the under-hood ABS fuse/relay box.**
- YES ↓

Disconnect the ABS pump motor 2P connector.

Measure the voltage between the ABS pump motor 2P connector No. 1 (WHT/BLU) terminal and body ground.

Is there battery voltage?

- NO → **Repair open in the WHT/BLU wire between the under-hood ABS fuse/relay box and ABS pump motor.**
- YES ↓

Measure the voltage between the ABS pump motor 2P connector No. 1 (WHT/BLU) and No. 2 (BLK) terminal.

Is there battery voltage?

- NO → **• Repair open in the BLK wire between the ABS pump motor and body ground.**
  • Repair poor ground (LHD: G202, RHD: G302).
- YES ↓

Replace the ABS pump motor.

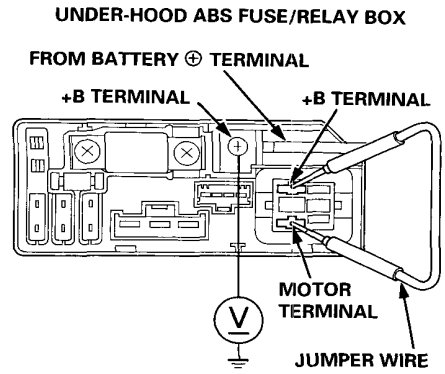

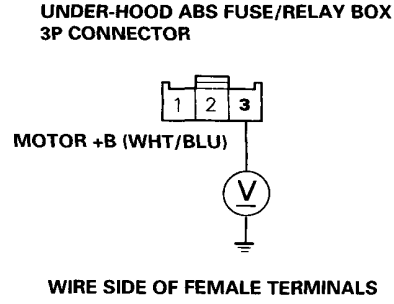

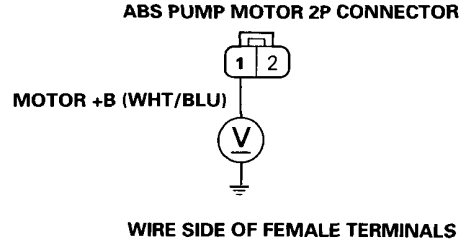

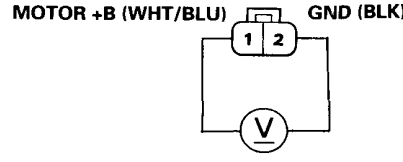

(From page 19-34)

Measure the voltage between the ABS control unit 26P connector No. 17 (WHT/BLU) terminal and body ground.

NOTE: The motor check (MCK) circuit is checked beginning with this step.

Is there battery voltage?

YES → **Repair open in the WHT/BLU wire between the under-hood ABS fuse/relay box and ABS control unit.**

NO → **Check for loose ABS control unit connectors. If necessary, substitute a known-good ABS control unit and recheck.**

ABS CONTROL UNIT 26P CONNECTOR

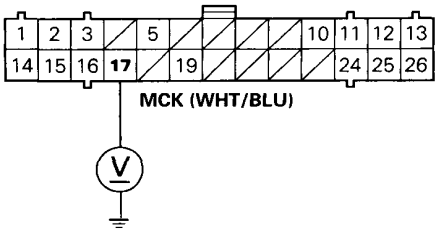

WIRE SIDE OF FEMALE TERMINALS

(cont'd)

ABS Pump Motor (cont'd)

(From page 19-35)

Remove the ABS pump motor relay.

NOTE:
- Short to body ground in the ABS pump motor relay coil circuit is checked beginning with this step.
- If the motor relay coil is shorted to body ground, the motor may be damaged. Check the pump motor operation.

Disconnect the under-hood ABS fuse/relay box 4P connector.

Check for continuity between the ABS pump motor relay connector PMR terminal and body ground.

Is there continuity?

YES → **Replace the under-hood ABS fuse/relay box. (Short circuit inside the box)**

NO

Disconnect the ABS control unit 22P connector.

Check for continuity between the ABS control unit 22P connector No. 21 (YEL/RED) terminal and body ground.

Is there continuity?

YES → **Repair short to body ground in the YEL/RED wire between the under-hood ABS fuse/relay box and ABS control unit.**

NO

Check for loose ABS control unit connectors. If necessary, substitute a known-good ABS control unit and recheck.

UNDER-HOOD ABS FUSE/RELAY BOX

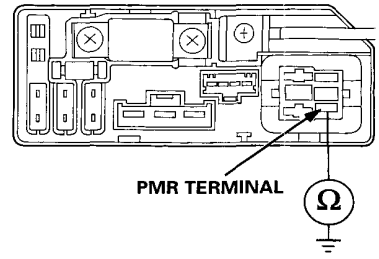

ABS CONTROL UNIT 22P CONNECTOR

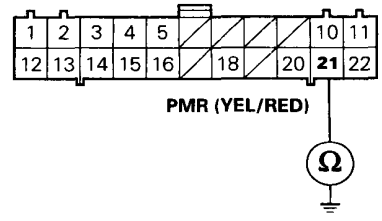

WIRE SIDE OF FEMALE TERMINALS

High Pressure Leakage

Diagnostic Trouble Code (DTC) 1-3: High Pressure Leakage Diagnosis

The ABS control unit counts the number of times that the ABS pump motor operates and stops during regular diagnosis. When the ABS pump motor repeatedly operates and stops, the ABS control unit determines that the high pressure system is leaking and turns the ABS indicator light on.
This count is reset when the ABS functions.
Possible causes:

- Leaking outlet valve
- Leaking relief valve
- Poor contact in pressure switch circuit

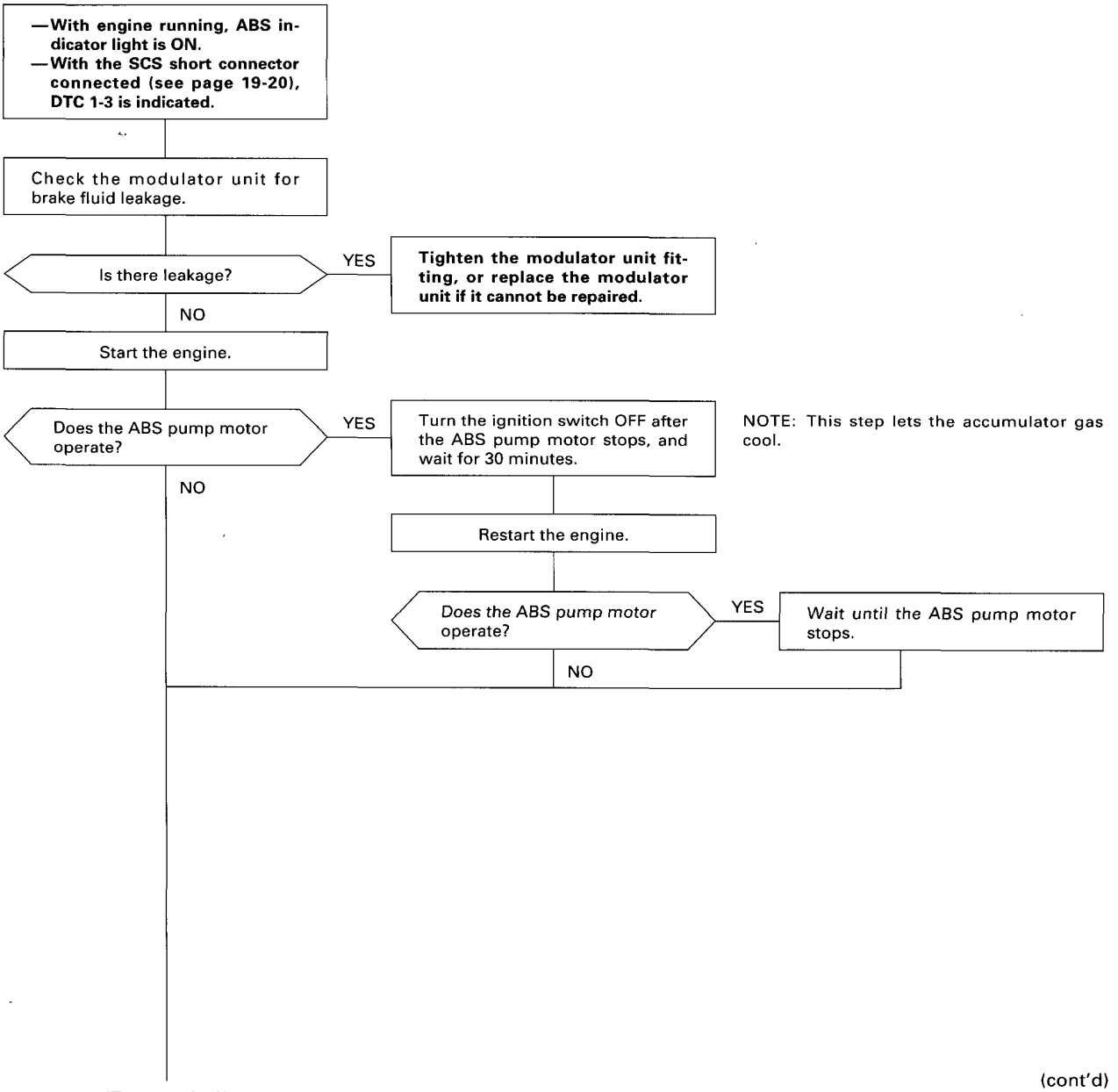

(To page 19-40)

(cont'd)

High Pressure Leakage (cont'd)

(From page 19-39)

Turn the ignition switch OFF.

Disconnect the modulator unit 14P connector.

After 30 minutes, check for continuity between the modulator unit 14P connector No. 4 (YEL) and No. 11 (BLK) terminals.

Is there continuity?

NO → **Replace the modulator unit.**
- **Leaking outlet valve**
- **Leaking relief valve**

YES → **Intermittent failure, system is OK at this time.**
Check for loose connectors and terminals in the pressure switch circuit.

MODULATOR UNIT 14P CONNECTOR

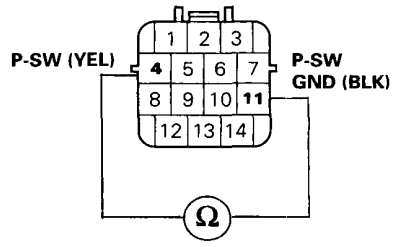

WIRE SIDE OF FEMALE TERMINALS

Pressure Switch

Diagnostic Trouble Code (DTC) 1-4: Pressure Switch Diagnosis

The ABS control unit momentarily activates the outlet solenoid valve and counts the number of times that the pressure switch signal is ON during the initial diagnosis.
When the ABS control unit does not detect the pressure switch OFF signal at all when the engine is started and stopped repeatedly, it keeps the ABS indicator light on. The count of the pressure switch ON signals is reset when the ABS control unit detects the pressure switch OFF signal.
Possible causes:

- Short to body ground between the ABS control unit and pressure switch
- Pressure switch stuck ON
- Faulty ABS control unit

—With engine running, ABS indicator light is ON.
—With the SCS short connector connected (see page 19-20), DTC 1-4 is indicated.

Bleed the high pressure brake fluid from the modulator unit (see page 19-92).

Disconnect the modulator unit 14P connector.

Check for continuity between the modulator unit 14P connector No. 4 (YEL) and No. 11 (BLK) terminals.

Is there continuity?

YES → **Visually inspect the modulator wire harness. If the harness is OK, replace the modulator unit. (Pressure switch stuck ON)**

NO

Disconnect the ABS control unit 26P connector.

Check for continuity between the ABS control unit 26P connector No. 19 (YEL) terminal and body ground.

Is there continuity?

YES → **Repair short to body ground in the YEL wire between the ABS control unit and modulator unit.**

NO

Check for loose ABS control unit connectors. If necessary, substitute a known-good ABS control unit and recheck.

MODULATOR UNIT 14P CONNECTOR

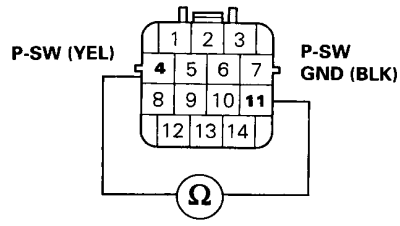

WIRE SIDE OF FEMALE TERMINALS

ABS CONTROL UNIT 26P CONNECTOR

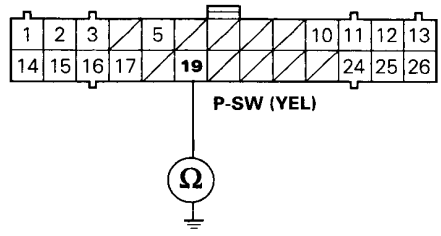

WIRE SIDE OF FEMALE TERMINALS

High Pressure System

Diagnostic Trouble Code (DTC) 1-8: High Pressure System Diagnosis

When the ABS control unit detects the pressure switch OFF signal during the initial diagnosis, it drives the ABS pump motor until the pressure switch turns ON. Then, it momentarily activates the outlet solenoid valve and monitors the pressure switch signal.
The ABS control unit keeps the ABS indicator light on if it detects the pressure switch OFF signal at this time.
Possible causes:

- Accumulator gas leakage
- Changed relief valve set pressure
- Rear outlet solenoid valve late to close
- Changed pressure switch set pressure

—With engine running, ABS indicator light is ON.
—With the SCS short connector connected (see page 19-20), DTC 1-8 is indicated.

Check the accumulator relief plug.

Is the plug OK?

NO → **Replace the modulator unit. (Accumulator gas leakage)**

YES

Start the engine and allow it to run until the ABS indicator light goes off, then stop the engine. Repeat this procedure 10 times.

NOTE: If there is a problem, the ABS pump motor should operate the second or third time you start the engine.
The ABS pump motor operates for a short time.

Does the ABS indicator light go off each time the engine is started?

YES →
- **Intermittent failure, the system is OK at this time.**
- **Replace the modulator unit if the symptom appears again.**

NO

Confirm the ABS code (see page 19-20).

Is code 1-8 indicated?

NO → **Perform the appropriate troubleshooting flowchart for the code.**

YES

Replace the modulator unit.
- **Accumulator gas leakage**
- **Relief valve set pressure out of spec**
- **Rear outlet solenoid valve late to close**
- **Pressure switch set pressure out of spec**

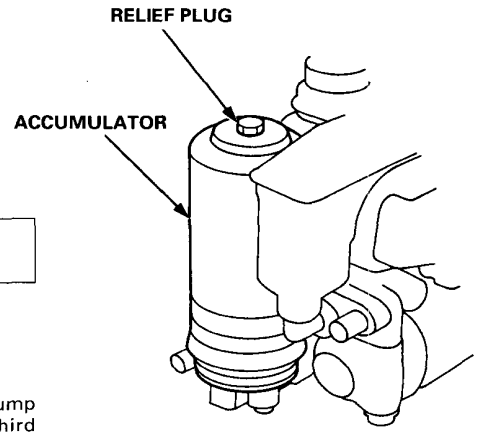

Parking Brake

Diagnostic Trouble Code (DTC) 2-1: Parking Brake Diagnosis

The ABS control unit monitors the parking brake signal during the regular diagnosis (during driving). It turns the ABS indicator light on if it detects the parking brake ON signal for 30 seconds.
Possible causes:

- Driving with the parking brake applied
- Low fluid level in the master cylinder reservoir
- Open circuit between the TURN SIGNALS/BACK-UP LIGHTS (10 A) fuse and brake system light
- Blown brake system light bulb
- Open circuit or short to body ground between the brake system light and ABS control unit
- Parking brake switch stuck ON
- Short to body ground between the brake system light and parking brake switch
- Brake fluid level switch stuck ON
- Short to body ground between the brake system light and brake fluid level switch
- Faulty ABS control unit

—With engine running, ABS indicator light is ON.
—With the SCS short connector connected (see page 19-20), DTC 2-1 is indicated.

Turn the ignition switch ON.

Pull up the parking brake lever.

Does the brake system light come on?
- YES → (To page 19-45)
- NO ↓

Remove the gauge assembly*, then disconnect the gauge assembly 12P connector.

* Refer to section 23 in the shop manual '93 ACCORD (Code No. 62SN700).

Measure the voltage between the gauge assembly 12P connector No. 5 (YEL) terminal and body ground.

Is there battery boltage?
- NO → **Repair open in the YEL wire between the TURN SIGNALS/BACK-UP LIGHTS (10 A) fuse and gauge assembly.**
- YES ↓

Check the brake system light bulb.

Is the bulb OK?
- NO → **Replace the brake system light bulb.**
- YES ↓

(To page 19-44)

GAUGE ASSEMBLY 12P CONNECTOR

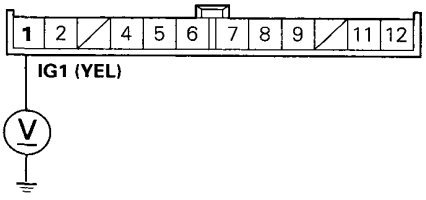

WIRE SIDE OF FEMALE TERMINALS

(cont'd)

Parking Brake (cont'd)

(From page 19-43)

Connect the gauge assembly 12P connector.

Connect the gauge assembly 6P connector No. 3 (GRN/RED) terminal to body ground.

Does the brake system light come on?

NO → **Replace the printed circuit board in the gauge assembly.**

YES → **Repair open in the GRN/RED wire between the gauge assembly and parking brake switch.**

GAUGE ASSEMBLY 6P CONNECTOR

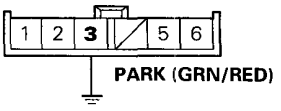

WIRE SIDE OF FEMALE TERMINALS

(From page 19-43)

ABS CONTROL UNIT 26P CONNECTOR

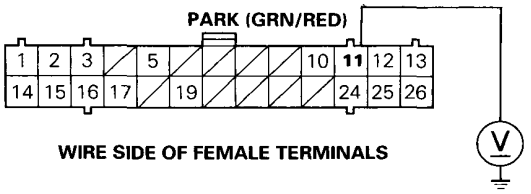

Release the parking brake lever.

Does the brake system light go off?

- YES → Test drive the car at speeds of 6 mph (10 km/h) or more for more than 30 seconds.
  - Does the ABS indicator light come on?
    - NO → **The probable cause was driving with the parking brake applied for more than 30 seconds.**
    - YES → Measure the voltage between the ABS control unit 26P connector No. 11 (GRN/RED) terminal and body ground.
      - Is there battery voltage?
        - NO → **Repair open in the GRN/RED wire between the gauge assembly and ABS control unit.**
        - YES → **Replace the ABS control unit. (Open circuit inside the unit)**
- NO ↓

Check the brake fluid level in the master cylinder reservoir.

Is the level is correct?

- NO → **Check the front brake pad thickness and brake system for leaks. If there are no problems, refill the master cylinder reservoir to the correct level.**
- YES ↓

Disconnect the brake fluid level switch connectors.

Does the brake system light go off?

- YES → **Replace the brake fluid level switch. (Switch stuck ON)**
- NO ↓

(To page 19-46)

(cont'd)

Parking Brake (cont'd)

(From page 19-45)

Check the parking brake switch *.

* Refer to section 23 in the shop manual '93 ACCORD (Code No. 62SN700).

Is the switch OK?

NO → **Replace the parking brake switch. (Switch stuck ON)**

YES ↓

Disconnect the ABS control unit 26P connector.

Does the brake system light go off?

YES → **Replace the ABS control unit. (Short to the body ground inside the unit)**

NO ↓

Repair short to body ground in the GRN/RED wire between the brake system light, parking brake switch and brake fluid level switch.

Pulser/Different Diameter Tire

Diagnostic Trouble Code (DTC) 3-1 to 3-8: Pulser Diagnosis

The ABS control unit monitors the wheel sensor signals during the regular diagnosis (during driving).
It turns the ABS indicator light on if it detects a periodic change in the wheel sensor signal of each wheel caused by a chipped pulser gear, etc.
Possible causes:

- Chipped pulser gear
- Improperly installed wheel sensor

DTC		Pulser			
		Right-front	Left-front	Right-rear	Left-rear
3	1	○			
	2		○		
	4			○	
	8				○

Diagnostic Trouble Code (DTC) 3-12: Different Diameter Tire Diagnosis

The ABS control unit detects the wheel sensor signal speed during the regular diagnosis (during driving).
This diagnosis is not performed when the parking brake switch signal is ON.
The ABS control unit may turn the ABS indicator light on when one or more different diameter tires are installed.

Right-front Wheel Sensor

Diagnostic Trouble Code (DTC) 4-1: Right-front Wheel Sensor Diagnosis

The ABS control unit monitors the wheel sensor signal during the regular diagnosis (at speeds of 6 mph (10 km/h) or more). This diagnosis is not performed when the parking brake signal is ON.
The ABS control unit turns the ABS indicator light on if it detects that there is no wheel sensor signal from the right-front wheel.
Possible causes:

- Open circuit, internal short or short to body ground in the right-front wheel sensor
- Open circuit or short to body ground in the positive (+) wire between the right-front wheel sensor and ABS control unit
- Open circuit or short to body ground in the negative (–) wire between the right-front wheel sensor and ABS control unit
- Positive (+) wire shorted to the negative (–) wire between the right-front wheel sensor and ABS control unit
- Loose connector or poor contact of terminals
- Improper right-front wheel sensor air gap
- Faulty ABS control unit
- Missing right-front pulser
- Modulator does not decrease pressure properly
- Wheel lock by downshift

— With engine running, ABS indicator light is ON.
— With the SCS short connector connected (see page 19-20), DTC 4-1 is indicated.

Disconnect the right-front wheel sensor 2P connector.

Measure the resistance between the wheel sensor 2P connector No. 1 and No. 2 terminals.

Is there 700 – 1,100 Ω?
- NO → **Replace the right-front wheel sensor.**
- YES ↓

Check for continuity between the wheel sensor 2P connector No. 2 terminal and body ground.

Is there continuity?
- YES → **Replace the right-front wheel sensor.**
- NO ↓

Disconnect the ABS control unit 22P connector.

Check for continuity between the ABS control unit 22P connector No. 5 (GRN/BLK) terminal and body ground.

NOTE: Check with the wheel sensor 2P connector disconnected.

Is there continuity?
- YES → **Repair short to body ground in the GRN/BLK wire between the ABS control unit and right-front wheel sensor.**
- NO ↓

(To page 19-49)

RIGHT-FRONT WHEEL SENSOR 2P CONNECTOR

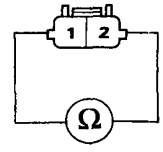

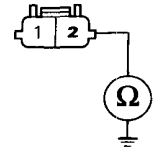

WIRE SIDE OF FEMALE TERMINALS

ABS CONTROL UNIT 22P CONNECTOR

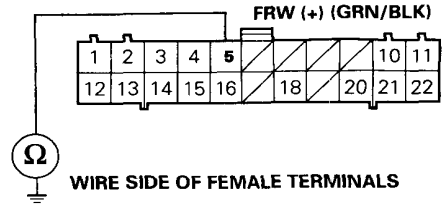

WIRE SIDE OF FEMALE TERMINALS

(From page 19-48)

Check for continuity between the ABS control unit 22P connector No. 4 (GRN) terminal and body ground.

Is there continuity?

YES → **Repair short to body ground in the GRN wire between the ABS control unit and right-front wheel sensor.**

NO

Connect the right-front wheel sensor 2P connector.

Measure the resistance between the ABS control unit 22P connector No. 4 (GRN) and No. 5 (GRN/BLK) terminals.

Is there 700 – 1,100 Ω?

NO → Connect the ABS control unit 22P connector No. 5 (GRN/BLK) terminal to body ground.

YES

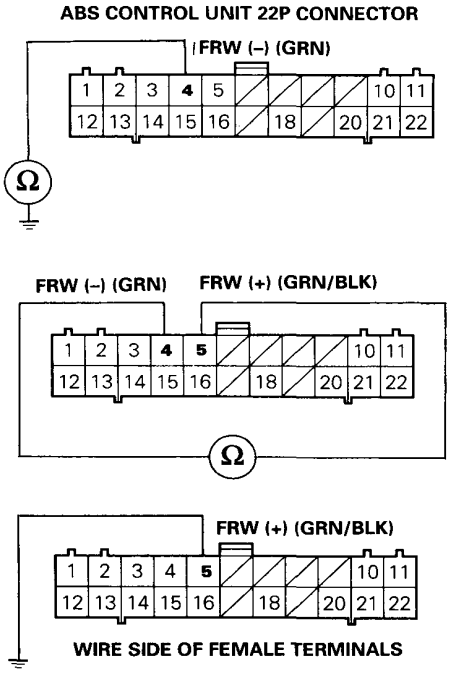

Disconnect the right-front wheel sensor 2P connector.

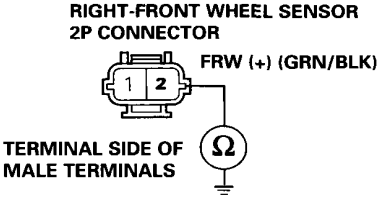

Check for continuity between the wheel sensor 2P connector No. 2 (GRN/BLK) terminal and body ground.

NOTE: Check with the ABS control unit 22P connector disconnected.

Is there continuity?

NO → **Repair open in the GRN/BLK wire between the ABS control unit and right-front wheel sensor.**

YES → **Repair open in the GRN wire between the ABS control unit and right-front wheel sensor.**

(To page 19-50)

(cont'd)

Right-front Wheel Sensor (cont'd)

(From page 19-49)

Measure the right-front wheel sensor air gap *.

* Refer to page 19-108 in the shop manual '93 ACCORD (Code No. 62SN700).

Is the air gap OK?

NO → **Correct the right-front wheel sensor air gap *.**

YES

Connect the ALB checker to the ABS inspection connector (see page 19-89).

Start the engine.

Turn the Mode Selector switch to "5".

Depress the brake pedal firmly and hold it.

Push the Start Test switch.

Confirm that the right-front wheel can be rotated by hand while the ABS is functioning.

NOTE: This step requires an assistant.

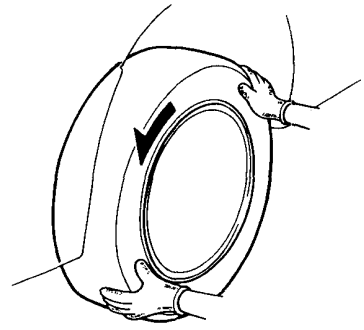

Can the wheel be rotated?

NO → **Replace the modulator unit.**

YES

- **Intermittent failure, the system is OK at this time.**
- **Wheel lock by downshift.**
- **Test drive the car. If the symptom reappears, replace the ABS control unit.**

Left-front Wheel Sensor

Diagnostic Trouble Code (DTC) 4-2: Left-front Wheel Sensor Diagnosis

The ABS control unit monitors the wheel sensor signal during the regular diagnosis (at speeds of 6 mph (10 km/h) or more). This diagnosis is not performed when the parking brake signal is ON.
The ABS control unit turns the ABS indicator light on if it detects that there is no wheel sensor signal from the left-front wheel.
Possible causes:

- Open circuit, internal short or short to body ground in the left-front wheel sensor
- Open circuit or short to body ground in the positive (+) wire between the left-front wheel sensor and ABS control unit
- Open circuit or short to body ground in the negative (–) wire between the left-front wheel sensor and ABS control unit
- Positive (+) wire shorted to the negative (–) wire between the left-front wheel sensor and ABS control unit
- Loose connector or poor contact of terminals
- Improper left-front wheel sensor air gap
- Faulty ABS control unit
- Missing left-front pulser
- Modulator does not decrease pressure properly
- Wheel lock by downshift

— With engine running, ABS indicator light is ON.
— With the SCS short connector connected (see page 19-20), DTC 4-2 is indicated.

Disconnect the left-front wheel sensor 2P connector.

Measure the resistance between the wheel sensor 2P connector No. 1 and No. 2 terminals.

Is there 700 – 1,100 Ω?
- NO → **Replace the left-front wheel sensor.**
- YES ↓

Check for continuity between the wheel sensor 2P connector No. 2 terminal and body ground.

Is there continuity?
- YES → **Replace the left-front wheel sensor.**
- NO ↓

Disconnect the ABS control unit 22P connector.

Check for continuity between the ABS control unit 22P connector No. 3 (GRN/BLU) terminal and body ground.

NOTE: Check with the wheel sensor 2P connector disconnected.

Is there continuity?
- YES → **Repair short to body ground in the GRN/BLU wire between the ABS control unit and left-front wheel sensor.**
- NO ↓

(To page 19-52)

LEFT-FRONT WHEEL SENSOR 2P CONNECTOR

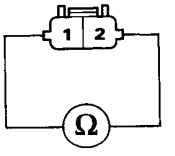

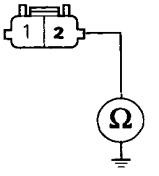

WIRE SIDE OF FEMALE TERMINALS

ABS CONTROL UNIT 22P CONNECTOR

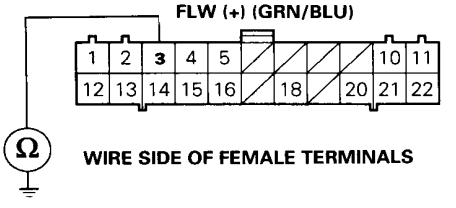

WIRE SIDE OF FEMALE TERMINALS

(cont'd)

Left-front Wheel Sensor (cont'd)

(From page 19-51)

Check for continuity between the ABS control unit 22P connector No. 2 (BRN) terminal and body ground.

Is there continuity?

YES → **Repair short to body ground in the BRN wire between the ABS control unit and left-front wheel sensor.**

NO

Connect the left-front wheel sensor 2P connector.

Measure the resistance between the ABS control unit 22P connector No. 2 (BRN) and No. 3 (GRN/BLU) terminals.

Is there 700 – 1,100 Ω?

NO → Connect the ABS control unit 22P connector No. 3 (GRN/BLU) terminal to body ground.

YES

Disconnect the left-front wheel sensor 2P connector.

Check for continuity between the wheel sensor 2P connector No. 2 (GRN/BLU) terminal and body.

Is there continuity?

NO → **Repair open in the GRN/BLU wire between the ABS control unit and left-front wheel sensor.**

YES → **Repair open in the BRN wires between the ABS control unit and left-front wheel sensor.**

(To page 19-53)

ABS CONTROL UNIT 22P CONNECTOR

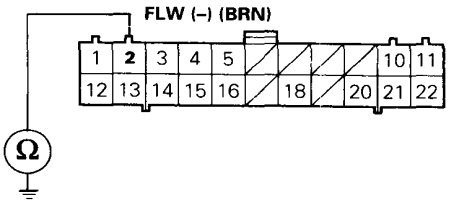

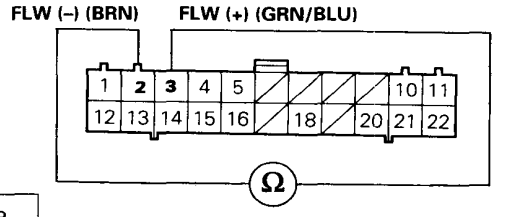

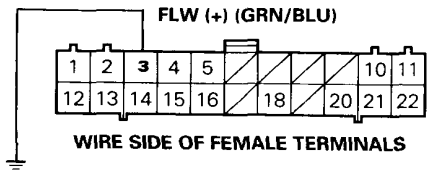

LEFT-FRONT WHEEL SENSOR 2P CONNECTOR

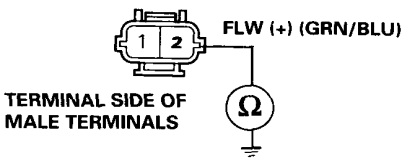

NOTE: Check with the ABS control unit 22P connector disconnected.

(From page 19-52)

Measure the left-front wheel sensor air gap *.

* Refer to page 19-108 in the shop manual '93 ACCORD (Code No. 62SN700).

Is the air gap OK?

NO → **Correct the left-front wheel sensor air gap *.**

YES

Connect the ALB checker to the ABS inspection connector (see page 19-89).

Start the engine.

Turn the Mode Selector switch to "4".

Depress the brake pedal firmly and hold it.

Push the Start Test switch.

Confirm that the left-front wheel can be rotated by hand while the ABS is functioning.

NOTE: This step requires an assistant.

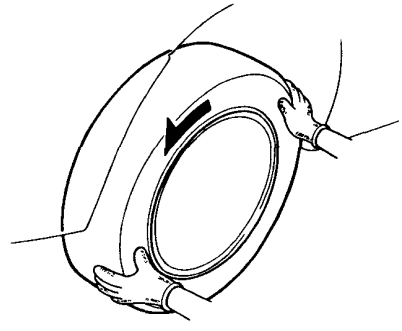

Can the wheel be rotated?

NO → **Replace the modulator unit.**

YES

- **Intermittent failure, the system is OK at this time.**
- **Wheel lock by downshift.**
- **Test drive the car. If the symptom reappears, replace the ABS control unit.**

Right-rear Wheel Sensor

Diagnostic Trouble Code (DTC) 4-4: Right-rear Wheel Sensor Diagnosis

The ABS control unit monitors the wheel sensor signal during the regular diagnosis (at speeds of 6 mph (10 km/h) or more). This diagnosis is not performed when the parking brake signal is ON.
The ABS control unit turns the ABS indicator light on if it detects that there is no wheel sensor signal from the right-rear wheel.
Possible causes:

- Open circuit, internal short or short to body ground in the right-rear wheel sensor
- Open circuit or short to body ground in the positive (+) wire between the right-rear wheel sensor and ABS control unit
- Open circuit or short to body ground in the negative (–) wire between the right-rear wheel sensor and ABS control unit
- Positive (+) wire shorted to the negative (–) wire between the right-rear wheel sensor and ABS control unit
- Loose connector or poor contact of terminals
- Improper right-rear wheel sensor air gap
- Faulty ABS control unit
- Missing right-rear pulser
- Modulator does not decrease pressure properly

— With engine running, ABS indicator light is ON.
— With the SCS short connector connected (see page 19-20), DTC 4-4 is indicated.

Disconnect the right-rear wheel sensor 2P connector.

Measure the resistance between the wheel sensor 2P connector No. 1 and No. 2 terminals.

Is there 550 – 850 Ω?
- NO → **Replace the right-rear wheel sensor.**
- YES ↓

Check for continuity between the wheel sensor 2P connector No. 2 terminal and body ground.

Is there continuity?
- YES → **Replace the right-rear wheel sensor.**
- NO ↓

Disconnect the ABS control unit 22P connector.

Check for continuity between the ABS control unit 22P connector No. 15 (GRN/YEL) terminal and body ground.

NOTE: Check with the wheel sensor 2P connector disconnected.

Is there continuity?
- YES → **Repair short to body ground in the GRN/YEL wire between the ABS control unit and right-rear wheel sensor.**
- NO ↓

(To page 19-55)

RIGHT-REAR WHEEL SENSOR 2P CONNECTOR

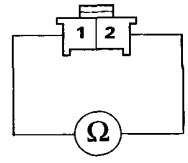

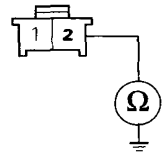

WIRE SIDE OF FEMALE TERMINALS

ABS CONTROL UNIT 22P CONNECTOR

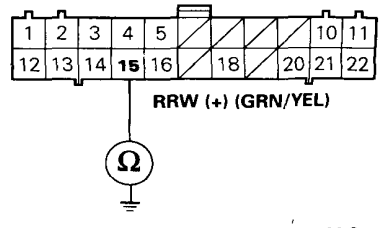

WIRE SIDE OF FEMALE TERMINALS

(From page 19-54)

Check for continuity between the ABS control unit 22P connector No. 16 (BLU/YEL) terminal and body ground.

Is there continuity?

YES → **Repair short to body ground in the BLU/YEL wire between the ABS control unit and right-rear wheel sensor.**

NO

Connect the right-rear wheel sensor 2P connector.

Measure the resistance between the ABS control unit 22P connector No. 15 (GRN/YEL) and No. 16 (BLU/YEL) terminals.

Is there 550 – 850 Ω?

NO → Connect the ABS control unit 22P connector No. 15 (GRN/YEL) terminal to body ground.

YES

Disconnect the right-rear wheel sensor 2P connector.

Check for continuity between the wheel sensor 2P connector No. 2 (GRN/YEL) terminal and body ground.

Is there continuity?

NO → **Repair open in the GRN/YEL wire between the ABS control unit and right-rear wheel sensor.**

YES → **Repair open in the BLU/YEL wire between the ABS control unit and right-rear wheel sensor.**

(To page 19-56)

ABS CONTROL UNIT 22P CONNECTOR

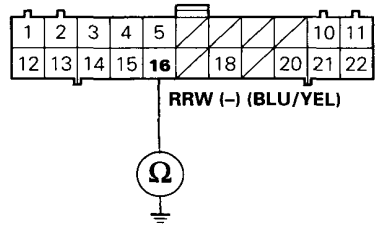

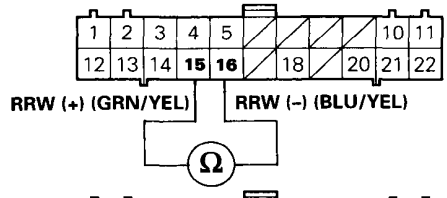

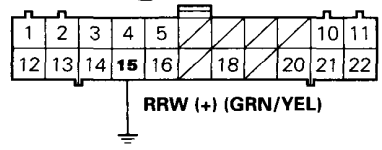

WIRE SIDE OF FEMALE TERMINALS

RIGHT-REAR WHEEL SENSOR 2P CONNECTOR

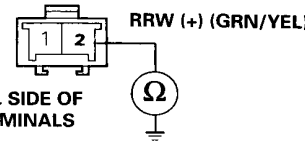

TERMINAL SIDE OF MALE TERMINALS

NOTE: Check with the ABS control unit 22P connector disconnected.

(cont'd)

Right-rear Wheel Sensor (cont'd)

(From page 19-55)

Measure the right-rear wheel sensor air gap *.

* Refer to page 19-108 in the shop manual '93 ACCORD (Code No. 62SN700).

Is the air gap OK?

NO → **Correct the right-rear wheel sensor air gap *.**

YES

Connect the ALB checker to the ABS inspection connector (see page 19-89).

Start the engine.

Turn the Mode Selector switch to "3".

Depress the brake pedal firmly and hold it.

Push the Start Test switch.

Confirm that the right-rear wheel can be rotated by hand while the ABS is functioning.

NOTE: This step requires an assistant.

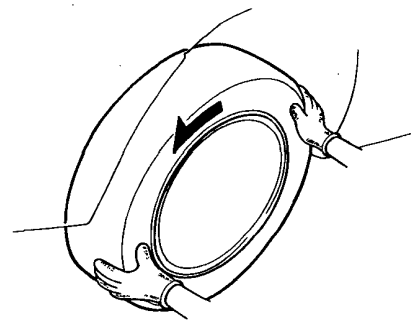

Can the wheel be rotated?

NO → **Replace the modulator unit.**

YES

- **Intermittent failure, the system is OK at this time.**
- **Test drive the car. If the symptom reappears, replace the ABS control unit.**

Left-rear Wheel Sensor

Diagnostic Trouble Code (DTC) 4-8: Left-rear Wheel Sensor Diagnosis

The ABS control unit monitors the wheel sensor signal during the regular diagnosis (at speeds of 6 mph (10 km/h) or more). This diagnosis is not performed when the parking brake signal is ON.
The ABS control unit turns the ABS indicator light on if it detects that there is no wheel sensor signal from the left-rear wheel.
Possible causes:

- Open circuit, internal short or short to body ground in the left-rear wheel sensor
- Open circuit or short to body ground in the positive (+) wire between the left-rear wheel sensor and ABS control unit
- Open circuit or short to body ground in the negative (–) wire between the left-rear wheel sensor and ABS control unit
- Positive (+) wire shorted to the negative (–) wire between the left-rear wheel sensor and ABS control unit
- Loose connector or poor contact of terminals
- Improper left-rear wheel sensor air gap
- Faulty ABS control unit
- Missing left-rear pulser
- Modulator does not decrease pressure properly
- Both front wheels spin (for example, when wheels are stuck)

— With engine running, ABS indicator light is ON.
— With the SCS short connector connected (see page 19-20), DTC 4-8 is indicated.

Disconnect the left-rear wheel sensor 2P connector.

Measure the resistance between the wheel sensor 2P connector No. 1 and No. 2 terminals.

Is there 550 – 850 Ω?
- NO → **Replace the left-rear wheel sensor.**
- YES ↓

Check for continuity between the wheel sensor 2P connector No. 2 terminal and body ground.

Is there continuity?
- YES → **Replace the left-rear wheel sensor.**
- NO ↓

Disconnect the ABS control unit 22P connector.

Check for continuity between the ABS control unit 22P connector No. 13 (LT BLU) terminal and body ground.

NOTE: Check with the wheel sensor 2P connector disconnected.

Is there continuity?
- YES → **Repair short to body ground in the LT BLU wire between the ABS control unit and left-rear wheel sensor.**
- NO ↓

(To page 19-58)

RIGHT-REAR WHEEL SENSOR 2P CONNECTOR

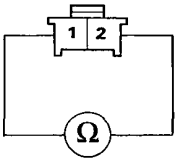

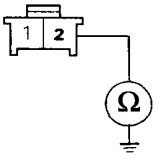

WIRE SIDE OF FEMALE TERMINALS

ABS CONTROL UNIT 26P CONNECTOR

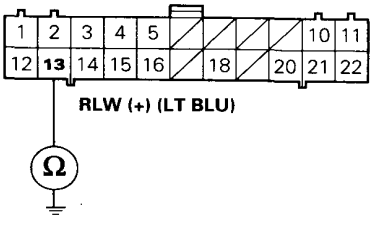

WIRE SIDE OF FEMALE TERMINALS

(cont'd)

Left-rear Wheel Sensor (cont'd)

(From page 19-57)

Check for continuity between the ABS control unit 22P connector No. 16 (GRY) terminal and body ground.

Is there continuity?

YES → **Repair short to body ground in the GRY wire between the ABS control unit and left-rear wheel sensor.**

NO

Connect the left-rear wheel sensor 2P connector.

Measure the resistance between the ABS control unit 22P connector No. 13 (LT BLU) and No. 14 (GRY) terminals.

Is there 550 – 850 Ω?

NO → Connect the ABS control unit 22P connector No. 13 (LT BLU) terminal to the body ground.

YES

Disconnect the left-rear wheel sensor 2P connector.

Check for continuity between the wheel sensor 2P connector No. 2 (LT BLU) terminal and body ground.

Is there continuity?

NO → **Repair open in the LT BLU wire between the ABS control unit and left-rear wheel sensor.**

YES

Repair open in the GRY wire between the ABS control unit and left-rear wheel sensor.

(To page 19-59)

ABS CONTROL UNIT 22P CONNECTOR

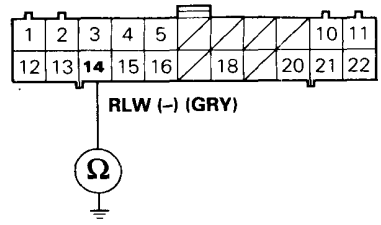

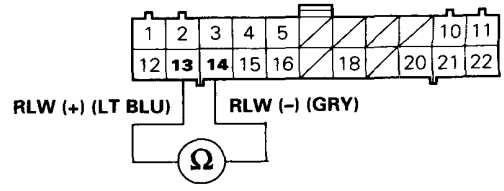

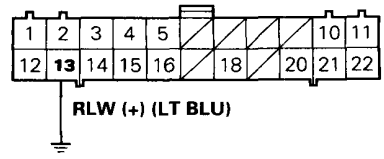

WIRE SIDE OF FEMALE TERMINALS

LEFT-REAR WHEEL SENSOR 2P CONNECTOR

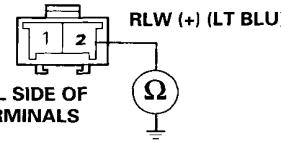

TERMINAL SIDE OF MALE TERMINALS

NOTE: Check with the ABS control unit 22P connector disconnected.

(From page 19-58)

Measure the left-rear wheel sensor air gap *.

* Refer to page 19-108 in the shop manual '93 ACCORD (Code No. 62SN700).

Is the air gap OK?

NO → **Correct the left-rear wheel sensor air gap *.**

YES

Connect the ALB checker to the ABS inspection connector (see page 19-89).

Start the engine.

Turn the Mode Selector switch to "2".

Depress the brake pedal firmly and hold it.

Push the Start Test switch.

Confirm that the left-rear wheel can be rotated by hand while the ABS is functioning.

NOTE: This step requires an assistant.

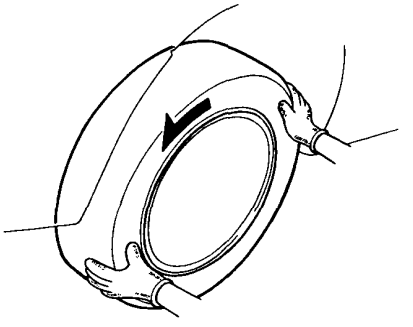

Can the wheel be rotated?

NO → **Replace the modulator unit.**

YES

- **Intermittent failure, the system is OK at this time.**
- **Test drive the car. If the symptom reappears, replace the ABS control unit.**

Rear Wheel Lock

Diagnostic Trouble Code (DTC) 5 to 5-8: Rear Wheel Lock Diagnosis

The ABS control unit monitors the rear wheel sensor signals during the regular diagnosis (during driving).
This diagnosis is not performed when the parking brake signal is ON.
The ABS control unit turns the ABS indicator light on if it detects no signal(s) from the rear wheel sensor(s) due to, for example, rear wheel lock.
Possible causes:

- Wheel spin during cornering
- Open circuit, internal short or short to the body ground in the wheel sensor system
- Rear brake drag
- Modulator does not decrease pressure properly
- Faulty ABS control unit

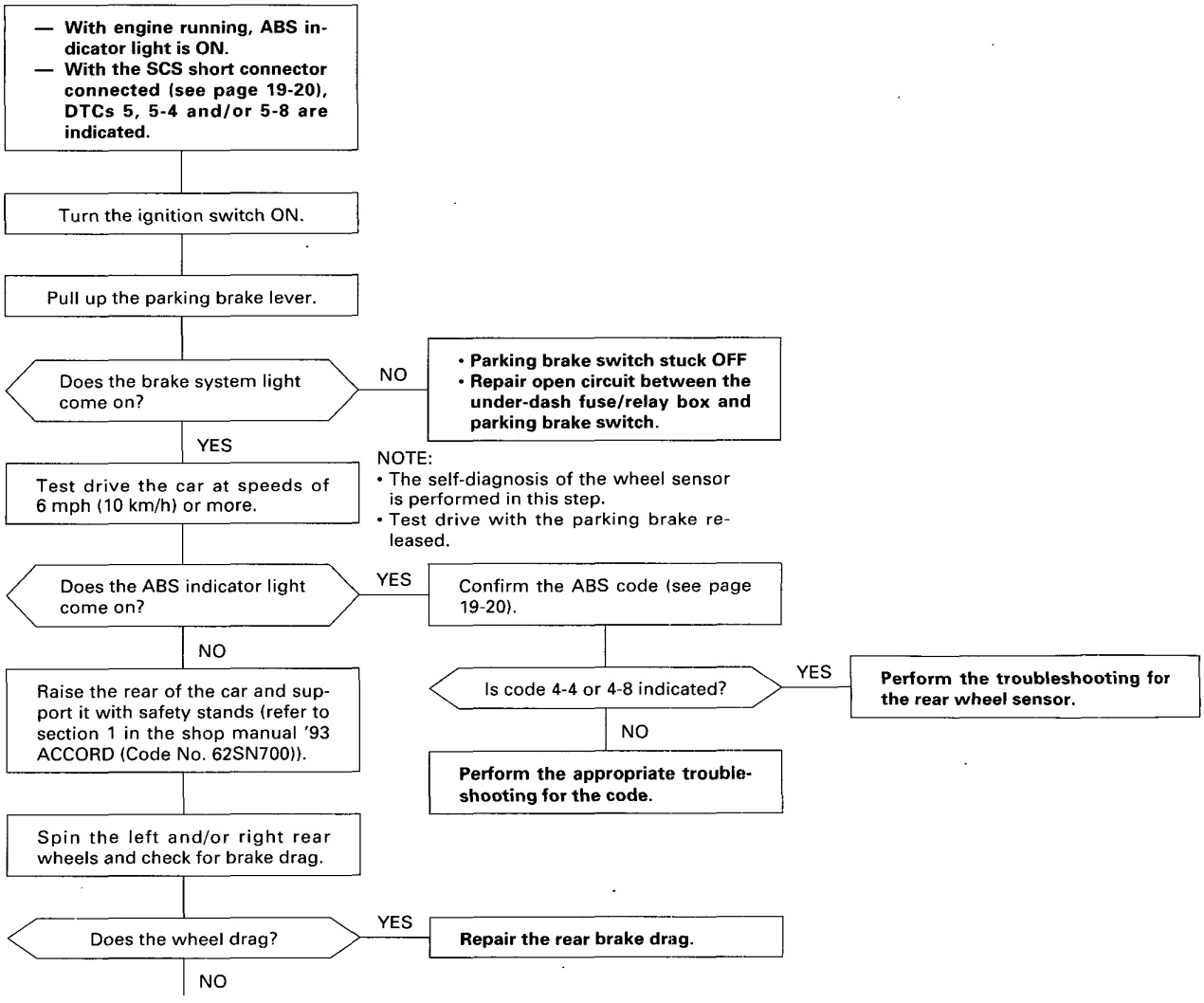

(To page 19-61)

(From page 19-60)

Connect the ALB checker to the ABS inspection connector (see page 19-89).

Start the engine.

Turn the Mode Selector switch to "2".

Depress the brake pedal firmly and hold it.

Push the Start Test switch.

Confirm that the rear wheels can be rotated by hand while the ABS is functioning.

NOTE: This step requires an assistant.

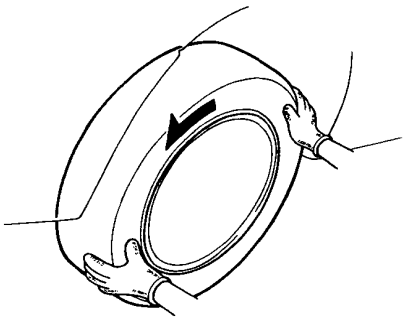

Can the wheels be rotated?

NO → **Replace the modulator unit.**

YES

- **Intermittent failure, the system is OK at this time.**
- **The probable cause was that the traction was lost due to excessive cornering speed, etc.**
- **Replace the ABS control unit if the symptom reappears.**

Front and Rear Fail-safe Relays

Diagnostic Trouble Code (DTC) 6: Front and Rear Fail-safe Relays Diagnosis

The ABS control unit monitors the voltage from the battery for the six solenoids during the initial diagnosis when the fail-safe relays are OFF.
The ABS control unit keeps the ABS indicator light on if it detects battery voltage at the front and rear solenoid circuits.
Possible causes:

- Short to power in the relay drive circuits between the fail-safe relays and ABS control unit
- Faulty relay drive transistor (ON) in the ABS control unit

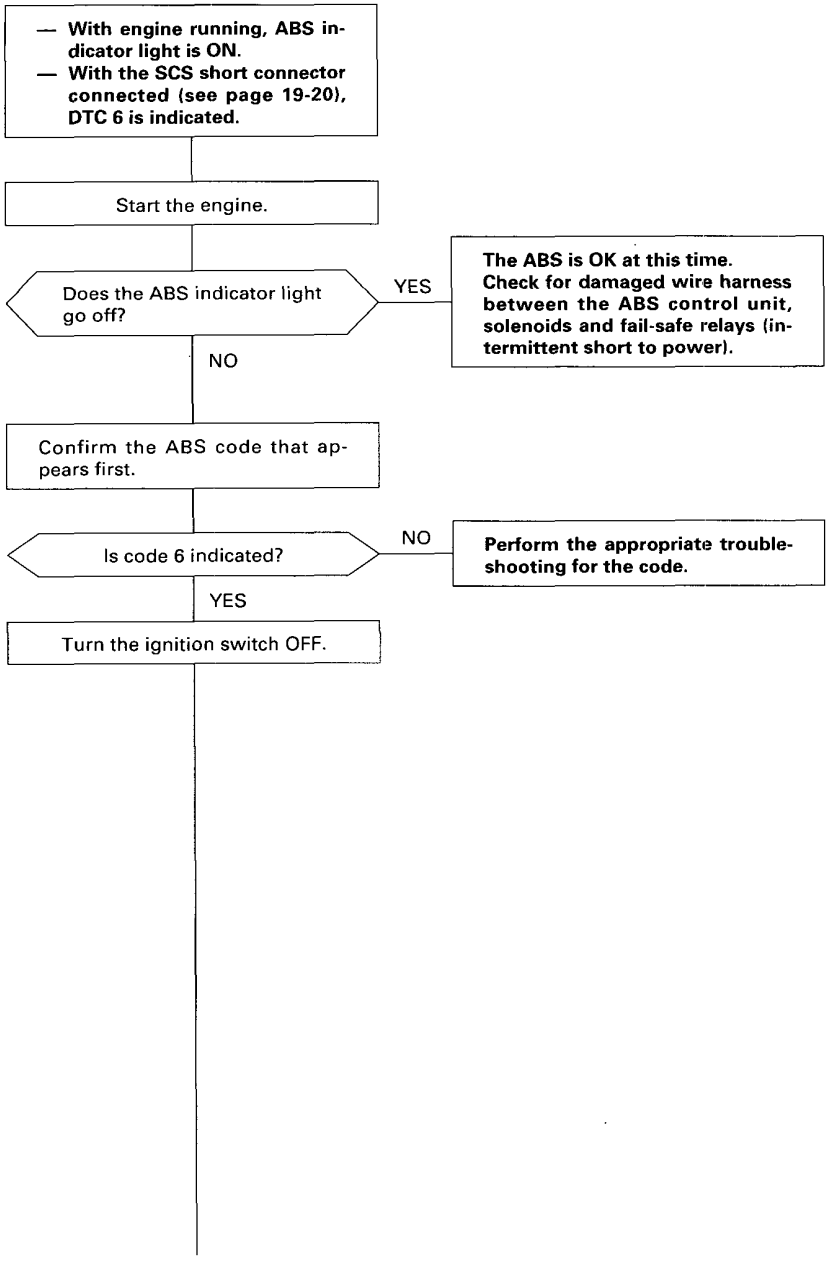

(To page 19-63)

(From page 19-62)

Disconnect the ABS control unit 22P connector.

Start the engine.

Measure the voltage between the ABS control unit 22P connector No. 1 (YEL/GRN) terminal and body ground.

Is there battery voltage?

YES → **Repair short to power in the YEL/GRN wire between ABS control unit, and front and rear fail-safe relays.**

NO

Turn the ignition switch OFF.

Connect the ABS control unit 22P connector.

Turn the ignition switch ON.

Measure the voltage between the ABS control unit 22P connector No. 1 (YEL/GRN) terminal and body ground.

Is there battery voltage?

YES → **Replace the ABS control unit. (Faulty fail-safe relay drive transistor)**

NO

Perform the troubleshooting for DTC 6-1 (see page 19-64) and DTC 6-4 (see page 19-67).

ABS CONTROL UNIT 22P CONNECTOR

FSR (YEL/GRN)

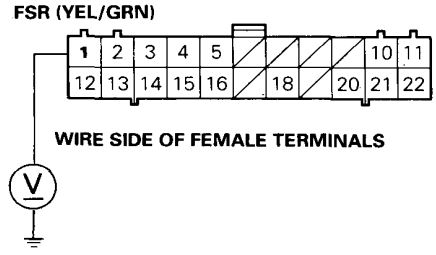

WIRE SIDE OF FEMALE TERMINALS

ABS CONTROL UNIT 22P CONNECTOR

FSR (YEL/GRN)

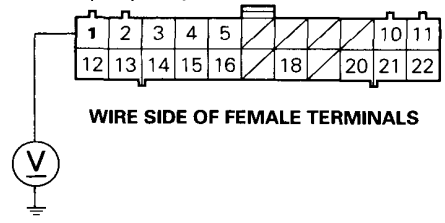

WIRE SIDE OF FEMALE TERMINALS

Front Fail-safe Relay

Diagnostic Trouble Code (DTC) 6-1: Front Fail-safe Relay Diagnosis

The ABS control unit monitors the voltage from the battery for the six solenoids during the initial diagnosis when the fail-safe relays are OFF.
The ABS control unit keeps the ABS indicator light on if it detects battery voltage at the front solenoid circuits.
Possible causes:

- Front fail-safe relay stuck ON
- Short to power in the solenoid drive circuits between the front fail-safe relay and ABS control unit

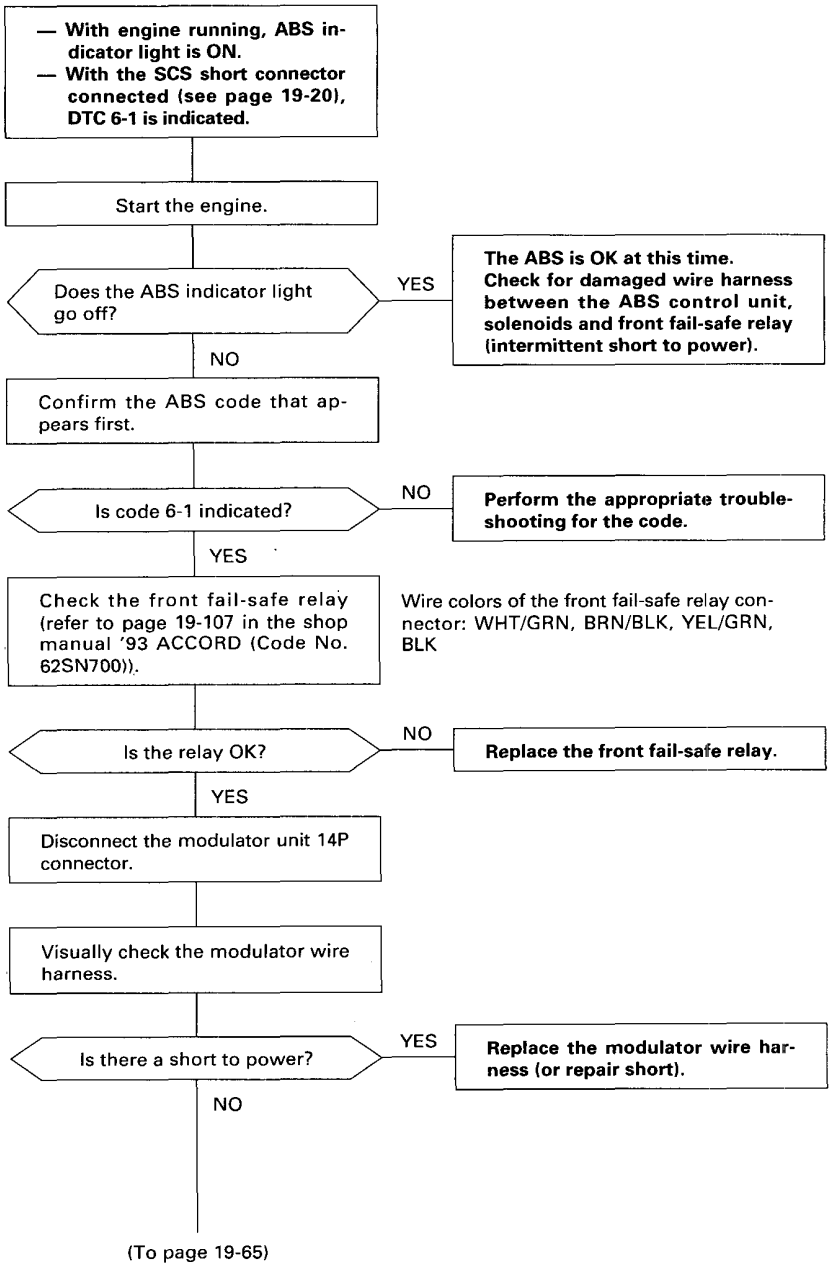

(From page 19-64)

Start the engine.

Measure the voltage between the front fail-safe relay connector No. 3 (BRN/BLK) terminal and body ground.

NOTE: The fail-safe relays are OFF when the ABS indicator light is kept on.

FRONT FAIL-SAFE RELAY CONNECTOR

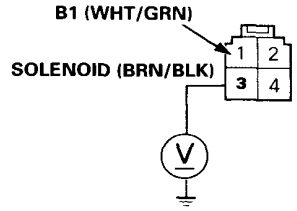

WIRE SIDE OF FEMALE TERMINALS

Is there battery voltage?

YES → **Repair short to power in the BRN/BLK wire between the front fail-safe relay and modulator unit.**

NO

Turn the ignition switch OFF.

Disconnect the ABS control unit 26P connector.

ABS CONTROL UNIT 26P CONNECTOR

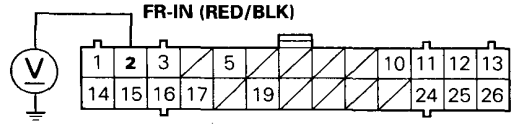

WIRE SIDE OF FEMALE TERMINALS

Start the engine.

Measure the voltage between the ABS control unit 26P connector No. 2 (RED/BLK) terminal and body ground.

NOTE: Check with the modulator unit 14P connector disconnected.

Is there battery voltage?

YES → **Repair short to power in the RED/BLK wire between the ABS control unit and modulator unit.**

NO

Measure the voltage between the ABS control unit 26P connector No. 1 (RED/BLU) terminal and body ground.

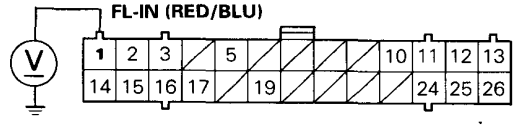

Is there battery voltage?

YES → **Repair short to power in the RED/BLU wire between the ABS control unit and modulator unit.**

NO

(To page 19-66)

(cont'd)

Front Fail-safe Relay (cont'd)

(From page 19-65)

Measure the voltage between the ABS control unit 26P connector No. 15 (YEL/BLK) terminal and body ground.

Is there battery voltage?

YES → **Repair short to power in the YEL/BLK wire between the ABS control unit and modulator unit.**

NO

Measure the voltage between the ABS control unit 26P connector No. 14 (YEL/BLU) terminal and body ground.

Is there battery voltage?

YES → **Repair short to power in the YEL/BLU wire between the ABS control unit and modulator unit.**

NO

Check for loose ABS control unit connectors. If necessary, substitute a known-good ABS control unit and recheck.

ABS CONTROL UNIT 26P CONNECTOR

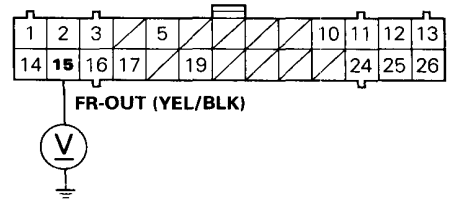

WIRE SIDE OF FEMALE TERMINALS

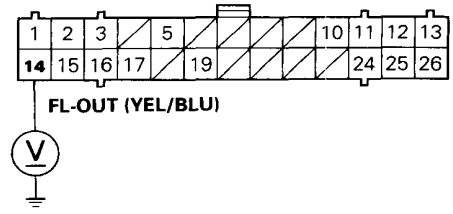

Rear Fail-safe Relay

Diagnostic Trouble Code (DTC) 6-4: Rear Fail-safe Relay Diagnosis

The ABS control unit monitors the voltage from the battery for the six solenoids during the initial diagnosis when the fail-safe relays are OFF.
The ABS control unit keeps the ABS indicator light on if it detects the battery voltage at the two rear solenoid circuits.
Possible causes:

- Rear fail-safe relay stuck ON
- Short to power in the solenoid drive circuits between the rear fail-safe relay and ABS control unit

— With engine running, ABS indicator light is ON.
— With the SCS short connector connected (see page 19-20), DTC 6-4 is indicated.

Start the engine.

Does the ABS indicator light go off?

YES → **The ABS is OK at this time. Check for damaged wire harness between the ABS control unit, solenoid and rear fail-safe relay (intermittent short to power).**

NO

Confirm the ABS code that appears first.

Is code 6-4 indicated?

NO → **Perform the appropriate trouble-shooting for the code.**

YES

Check the rear fail-safe relay (refer to page 19-107 in the shop manual '93 ACCORD (Code No. 62SN700)).

Wire colors of the rear fail-safe relay connector: WHT, BLU/BLK, YEL/GRN, BLK

Is the relay OK?

NO → **Replace the rear fail-safe relay.**

YES

Disconnect the modulator unit 14P connector.

Visually check the modulator wire harness.

Is there a short to power?

YES → **Replace the modulator wire harness (or repair short).**

NO

(To page19-68)

(cont'd)

Rear Fail-safe Relay (cont'd)

(From page 19-67)

Start the engine.

Measure the voltage between the rear fail-safe relay connector No. 3 (BLU/BLK) terminal and body ground.

NOTE: The fail-safe relays are OFF when the ABS indicator light is kept on.

Is there battery voltage?

YES → **Repair short to power in the BLU/BLK wire between the rear fail-safe relay and modulator unit.**

NO

Turn the ignition switch OFF.

Disconnect the ABS control unit 26P connector.

Start the engine.

Measure the voltage between the ABS control unit 26P connector No. 3 (RED/WHT) terminal and body ground.

NOTE: Check with the modulator unit 14P connector disconnected.

Is there battery voltage?

YES → **Repair short to power in the RED/WHT wire between the ABS control unit and modulator unit.**

NO

Measure the voltage between the ABS control unit 26P connector No. 16 (YEL/WHT) terminal and body ground.

Is there battery voltage?

YES → **Repair short to power in the YEL/WHT wire between the ABS control unit and modulator unit.**

NO

Check for loose ABS control unit connectors. If necessary, substitute a known-good ABS control unit and recheck.

REAR FAIL-SAFE RELAY CONNECTOR

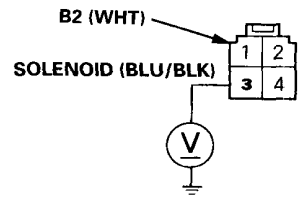

WIRE SIDE OF FEMALE TERMINALS

ABS CONTROL UNIT 26P CONNECTOR

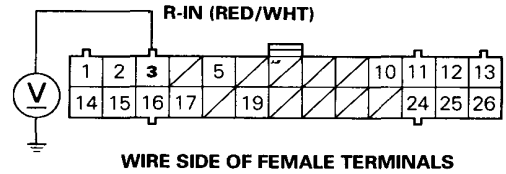

WIRE SIDE OF FEMALE TERMINALS

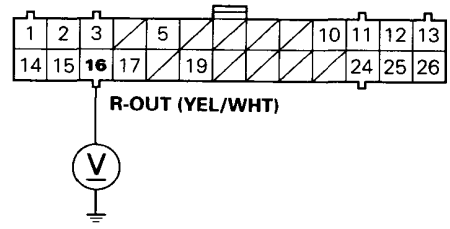

Right-front Solenoid

Diagnostic Trouble Code (DTC) 7-1: Right-front Solenoid Diagnosis

During the initial diagnosis, after the fail-safe relays are turned on, and during the regular diagnosis, the ABS control unit monitors the voltage from the battery for the six solenoids (when the ABS is not functioning).
If the detection circuit for the right-front solenoid detects 0 V, the ABS control unit keeps the ABS indicator light on after the engine is started. It turns the ABS indicator light on again if it detects 0 V after the light goes off.
Possible causes:

- Open circuit in the right-front solenoid drive circuits between the front fail-safe relay and ABS control unit
- Short circuit to body ground in the right-front solenoid drive circuits between the solenoids and ABS control unit
- Faulty right-front solenoid drive transistor (ON) in the ABS control unit

The ABS control unit momentarily outputs the ON signal to each solenoid (too momentary to turn the solenoid on) during the initial diagnosis, and each time the car is started, to check the voltage from the battery with the detection circuit.
If the detection circuit for the right-front solenoids detects battery voltage at this time, the ABS control unit keeps the ABS indicator light on. It turns the ABS indicator light on again if it detects battery voltage when the car is started.
Possible causes:

- Short circuit to power in the right-front solenoid drive circuits between the solenoids and ABS control unit
- Faulty right-front solenoid drive transistor (OFF) in the ABS control unit
- Short circuit to power in the right-front solenoid drive circuits in the modulator wire harness or solenoids
- Short circuit to the right-front solenoid outlet circuit in the inlet circuit between the solenoid and ABS control unit

— With engine running, ABS indicator light is ON.
— With the SCS short connector connected (see page 19-20), DTC 7-1 is indicated.

Start the engine.

Does the ABS indicator light go off?

YES → **The system is OK at this time. Check the wire harness and connectors between the ABS control unit, fail-safe relay and modulator unit (intermittent open or short circuit).**

NO

Confirm the ABS code that appears first.

Is code 7-1 indicated?

NO → **Perform the appropriate troubleshooting for the code.**

YES

Disconnect the modulator unit 14P connector.

Remove the front fail-safe relay.

Wire colors of the front fail-safe relay connector: WHT/GRN, BRN/BLK, YEL/GRN, BLK

Connect the front fail-safe relay connector No. 1 (WHT/GRN) and No. 3 (BRN/BLK) terminals using a jumper wire.

(To page 19-70)

FRONT FAIL-SAFE RELAY CONNECTOR

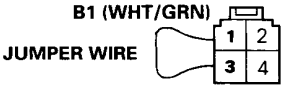

WIRE SIDE OF FEMALE TERMINALS

(cont'd)

Right-front Solenoid (cont'd)

(From page 19-69)

Measure the voltage between the modulator unit 14P connector No. 5 (BRN/BLK) and No. 8 (BRN/BLK) terminals and body ground.

Is there battery voltage?

NO → **Repair open in the BRN/BLK wire(s) between the front fail-safe relay and modulator unit.**

YES

Measure the resistance between the modulator unit 14P connector terminals to determine the solenoid standard resistance (A type or B type).
Inlet:
— No. 9 (WHT) and No. 13 (RED/WHT)
— No. 10 (WHT/BLU) and No. 14 (RED/BLU)
Outlet:
— No. 2 (YEL/WHT) and No. 6 (GRY/WHT)
— No. 3 (YEL/BLU) and No. 7 (GRY/BLU)

NOTE:

	STANDARD RESISTANCE	
	A TYPE	B TYPE
Inlet Solenoid	2.5 – 2.9 Ω	6.5 – 7.5 Ω
Outlet Solenoid	2.5 – 2.9 Ω	3.3 – 3.9 Ω

Measure the resistance between the modulator unit 14P connector No. 1 (YEL/BLK) and No. 5 (GRY/BLK) terminals, and the No. 8 (WHT/BLK) and No. 12 (RED/BLK) terminals.

Is the resistance as specified?
Inlet: 2.5 – 2.9 Ω or 6.5 – 7.5 Ω
Outlet: 2.5 – 2.9 Ω or 3.3 – 3.9 Ω

NO → **Visually inspect the modulator wire harness. If the harness is OK, replace the modulator unit. (Open or short in the right-front inlet or outlet solenoid)**

YES

(To page 19-71)

MODULATOR UNIT 14P CONNECTOR

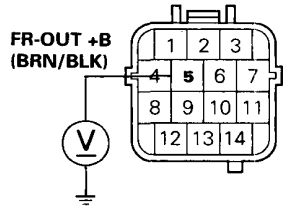

TERMINAL SIDE OF MALE TERMINALS

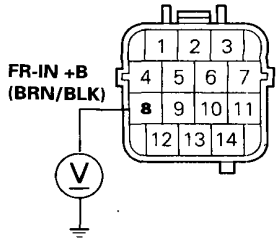

MODULATOR UNIT 14P CONNECTOR

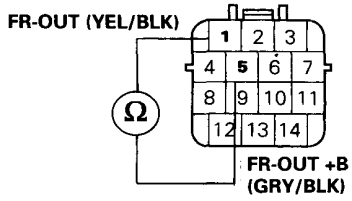

WIRE SIDE OF FEMALE TERMINALS

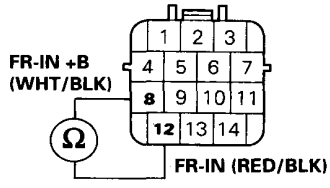

(From page 19-70)

Check for continuity between the modulator unit 14P connector No. 1 (YEL/BLK) and No. 12 (RED/BLK) terminals and body ground.

Is there continuity?

YES → **Visually inspect the modulator wire harness. If the harness is OK, replace the modulator unit. (Short to body ground in the right-front inlet or outlet solenoid)**

NO

MODULATOR UNIT 14P CONNECTOR

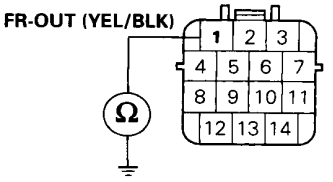

WIRE SIDE OF FEMALE TERMINALS

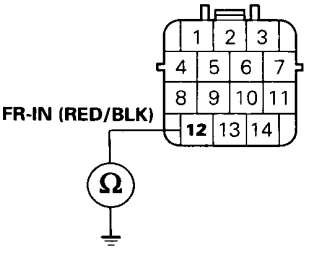

Check for continuity between the modulator unit 14P connector No. 1 (YEL/BLK) and No. 12 (RED/BLK) terminals.

Is there continuity?

YES → **Replace the modulator wire harness. (Short to the RED/BLK wire in the YEL/BLK wire.)**

NO

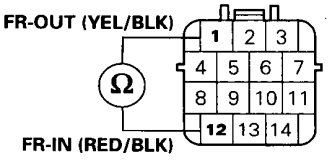

Disconnect the ABS control unit 26P connector.

Check for continuity between the ABS control unit 26P connector No. 15 (YEL/BLK) and No. 2 (RED/BLK) terminals and body ground.

Is there continuity?

YES → **Repair short to body ground in the YEL/BLK or RED/BLK wire between the ABS control unit and modulator unit.**

NO

ABS CONTROL UNIT 26P CONNECTOR

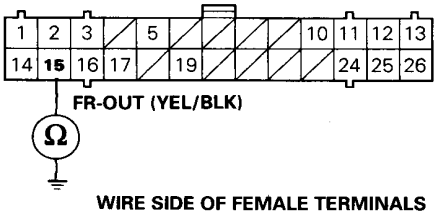

WIRE SIDE OF FEMALE TERMINALS

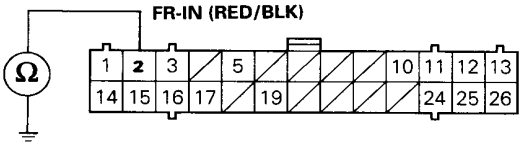

(To page 19-72)

(cont'd)

Right-front Solenoid (cont'd)

(From page 19-71)

Check for continuity between the ABS control unit 26P connector No. 2 (RED/BLK) and No. 15 (YEL/BLK) terminals.

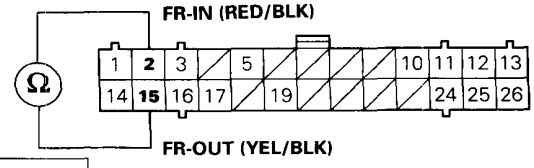

Is there continuity?

- YES → **Repair short to the YEL/BLK wire in the RED/BLK wire between the ABS control unit and modulator unit.**
- NO ↓

Connect the modulator unit 14P connector.

Measure the voltage between the ABS control unit 26P connector No. 15 (YEL/BLK) and No. 2 (RED/BLK) terminals and body ground.

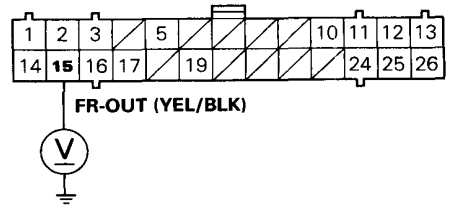

Is there battery voltage?

- NO → **Repair open in the YEL/BLK or RED/BLK wire between the ABS control unit and modulator unit.**
- YES ↓

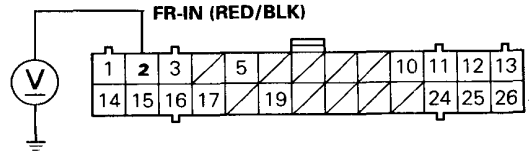

Check for continuity between the ABS control unit 26P connector No. 12 (BLK) terminal and body ground.

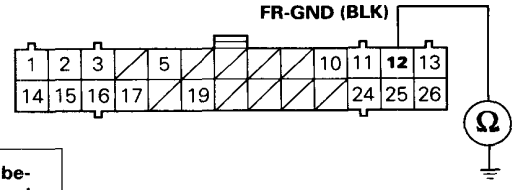

Is there continuity?

- NO → **Repair open in the BLK wire between the ABS control unit and body ground, or a poor ground.**
- YES ↓

Check for loose ABS control unit connectors. If necessary, substitute a known-good ABS control unit and recheck.

Left-front Solenoid

Diagnostic Trouble Code (DTC) 7-2: Left-front Solenoid Diagnosis

During the initial diagnosis, after the fail-safe relays are turned on, and during the regular diagnosis, the ABS control unit monitors the voltage from the battery for the six solenoids (when the ABS is not functioning).
If the detection circuit for the left-front solenoid detects 0 V, the ABS control unit keeps the ABS indicator light on after the engine is started. It turns the ABS indicator light on again if it detects 0 V after the light goes off.
Possible causes:

- Front fail-safe relay stuck OFF
- Open circuit in the left-front solenoid drive circuits between the under-hood ABS fuse/relay box and ABS control unit
- Short circuit to body ground in the left-front solenoid drive circuits between the solenoids and ABS control unit
- Faulty left-front solenoid drive transistor (ON) in the ABS control unit

The ABS control unit momentarily outputs the ON signal to each solenoid (too momentary to turn the solenoid on) during the initial diagnosis, and each time the car is started, to check the voltage from the battery with the detection circuit.
If the detection circuit for the left-front solenoids detects battery voltage at this time, the ABS control unit keeps the ABS indicator light on. It turns the ABS indicator light on again if it detects the battery voltage when the car is started.
Possible causes:

- Short circuit to power in the left-front solenoid drive circuits between the solenoids and ABS control unit
- Faulty left-front solenoid drive transistor (OFF) in the ABS control unit
- Short circuit to power in the left-front solenoid drive circuits in the modulator wire harness or solenoids
- Short circuit to the left-front solenoid outlet circuit in the inlet circuit between the solenoids and ABS control unit
- Short circuit to the right-front solenoid inlet or outlet circuit in the left-front solenoid inlet or outlet circuit between the solenoids and ABS control unit

— With engine running, ABS indicator light is ON.
— With the SCS short connector connected (see page 19-20), DTC 7-2 is indicated.

Start the engine.

Does the ABS indicator light go off?

YES → **The system is OK at this time. Check the wire harness and connectors between the ABS control unit, fail-safe relay and modulator unit (intermittent open or short circuit).**

NO

Confirm the ABS code that appears first.

Is code 7-2 indicated?

NO → **Perform the appropriate troubleshooting for the code.**

YES

Check the ABS B1 (20 A) fuse in the under-hood ABS fuse/relay box.

Is the fuse OK?

NO → **Replace the fuse, and recheck.**

YES

NOTE: Reinstall the fuse if it is OK.

(To page 19-74)

UNDER-HOOD ABS FUSE/RELAY BOX

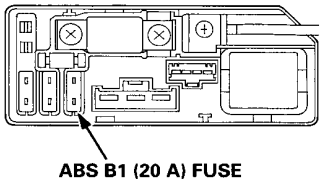

(cont'd)

Left-front Solenoid (cont'd)

(From page 19-73)

Measure the voltage between the under-hood ABS fuse/relay box 4P connector No. 2 (WHT/GRN) terminal and body ground.

Is there battery voltage?

- NO → **Replace the under-hood ABS fuse/relay box. (Internal open)**
- YES ↓

Remove the front fail-safe relay.

Wire colors of the front fail-safe relay connector: WHT/GRN, BRN/BLK, YEL/GRN, BLK

Measure the voltage between the front fail-safe relay connector No. 1 (WHT/GRN) terminal and body ground.

Is there battery voltage?

- NO → **Repair open in the WHT/GRN wire between the under-hood ABS fuse/relay box and front fail-safe relay.**
- YES ↓

Check the front fail-safe relay *.

* Refer to page 19-107 in the shop manual '93 ACCORD (Code No. 62SN700).

Is the relay OK?

- NO → **Replace the front fail-safe relay.**
- YES ↓

Disconnect the modulator unit 14P connector.

Connect the front fail-safe relay connector No. 1 (WHT/GRN) and No. 3 (BRN/BLK) terminals using a jumper wire.

(To page 19-75)

UNDER-HOOD ABS FUSE/RELAY BOX 4P CONNECTOR

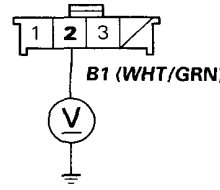

WIRE SIDE OF FEMALE TERMINALS

FRONT FAIL-SAFE RELAY CONNECTOR

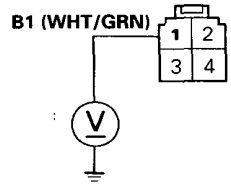

WIRE SIDE OF FEMALE TERMINALS

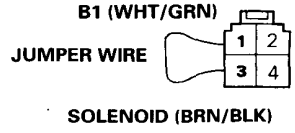

(From page 19-74)

Measure the voltage between the modulator unit 14P connector No. 7 (BRN/BLK) and No. 10 (BRN/BLK) terminals and body ground.

Is there battery voltage?

NO → **Repair open in the BRN/BLK wire(s) between the front fail-safe relay and modulator unit.**

YES

Measure the resistance between the modulator unit 14P connector terminals to determine the solenoid standard resistance (A type or B type).
Inlet:
— No. 8 (WHT/BLK) and No. 12 (RED/BLK)
— No. 9 (WHT) and No. 13 (RED/WHT)
Outlet:
— No. 1 (YEL/BLK) and No. 5 (GRY/BLK)
— No. 2 (YEL/WHT) and No. 6 (GRY/WHT)

NOTE:

	STANDARD RESISTANCE	
	A TYPE	B TYPE
Inlet Solenoid	2.5 – 2.9 Ω	6.5 – 7.5 Ω
Outlet Solenoid	2.5 – 2.9 Ω	3.3 – 3.9 Ω

Measure the resistance between the modulator unit 14P connector No. 3 (YEL/BLU) and No. 7 (GRY/BLU) terminals, and the No. 10 (WHT/BLU) and No. 14 (RED/BLU) terminals.

Is the resistance as specified?
Inlet: 2.5 – 2.9 Ω or 6.5 – 7.5 Ω
Outlet: 2.5 – 2.9 Ω or 3.3 – 3.9 Ω

NO → **Visually inspect the modulator wire harness. If the wire harness is OK, replace the modulator unit. (Open or short in the left-front inlet or outlet solenoid)**

YES

(To page 19-76)

MODULATOR UNIT 14P CONNECTOR

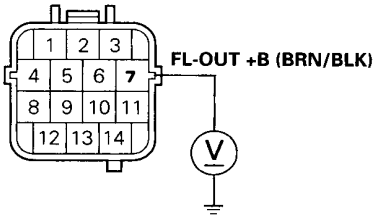

TERMINAL SIDE OF MALE TERMINALS

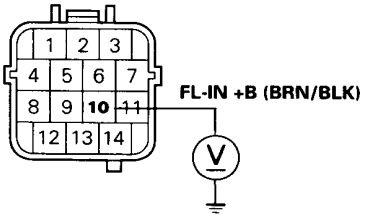

MODULATOR UNIT 14P CONNECTOR

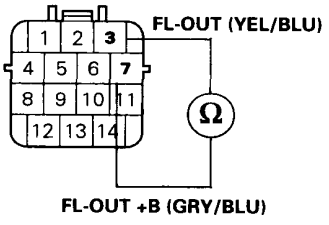

WIRE SIDE OF FEMALE TERMINALS

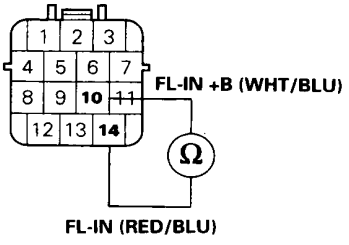

(cont'd)

Left-front Solenoid (cont'd)

(From page 19-75)

Check for continuity between the modulator unit 14P connector No. 3 (YEL/BLU) and No. 14 (RED/BLU) terminals and body ground.

Is there continuity?

YES → **Visually inspect the modulator wire harness. If the wire harness is OK, replace the modulator unit. (Short to body ground in the left-front inlet or outlet solenoid)**

NO

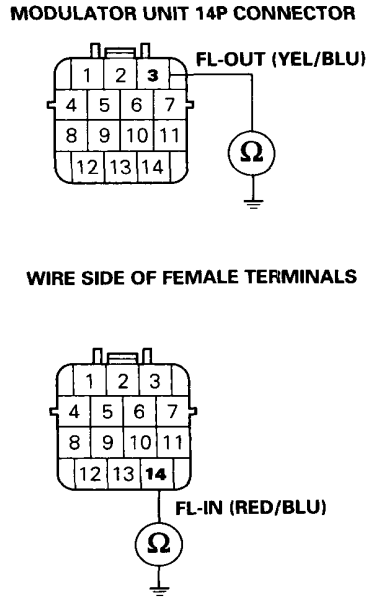

Check for continuity between the modulator unit 14P connector No. 14 (RED/BLU) terminal and following terminals:
- No. 3 (YEL/BLU): Left-front outlet
- No. 12 (RED/BLK): Right-front inlet
- No. 1 (YEL/BLK): Right-front outlet

Is there continuity?

YES → **Replace the modulator wire harness. (Short to the YEL/BLU, RED/BLK or YEL/BLK wire in the RED/BLU wire)**

NO

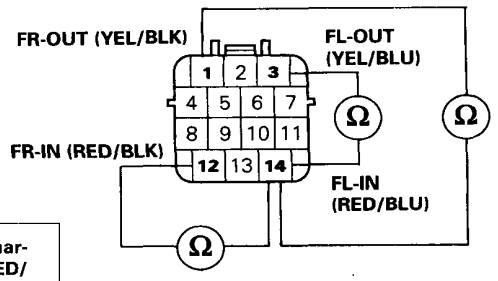

Check for continuity between the modulator unit 14P connector No. 3 (YEL/BLU) terminal and following terminals:
- No. 12 (RED/BLK): Right-front inlet
- No. 1 (YEL/BLK): Right-front outlet

Is there continuity?

YES → **Replace the modulator wire harness. (Short to the RED/BLK or YEL/BLK wire in the YEL/BLU wire)**

NO

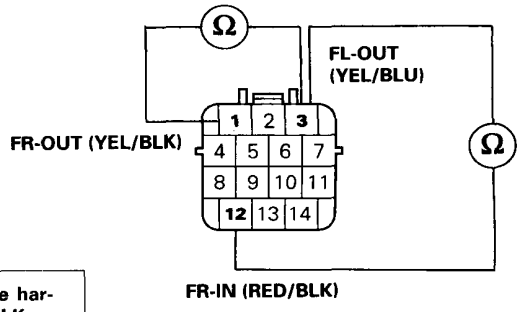

(To page 19-77)

(From page 19-76)

Disconnect the ABS control unit 26P connector.

Check for continuity between the ABS control unit 26P connector No. 14 (YEL/BLU) and No. 1 (RED/BLU) terminals and body ground.

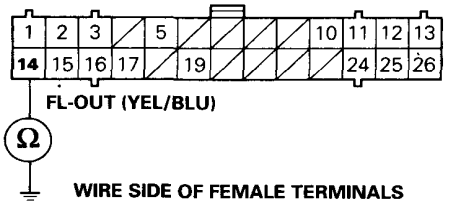

Is there continuity?

YES → **Repair short to body ground in the YEL/BLU or RED/BLU wire between the ABS control unit and modulator unit.**

NO

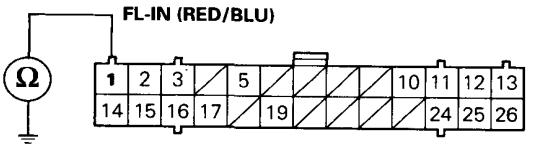

Check for continuity between the ABS control unit 26P connector No. 1 (RED/BLU) and following terminals.
- No. 14 (YEL/BLU): Left-front outlet
- No. 2 (RED/BLK): Right-front inlet
- No. 15 (YEL/BLK): Right-front outlet

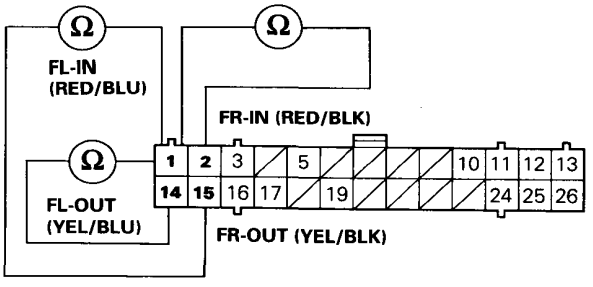

Is there continuity?

YES → **Repair short to the YEL/BLU, RED/BLK or YEL/BLK wire in the RED/BLU wire between the ABS control unit and modulator unit.**

NO

Check for continuity between the ABS control unit 26P connector No. 14 (YEL/BLU) and following terminals.
- No. 2 (RED/BLK): Right-front inlet
- No. 15 (YEL/BLK): Right-front outlet

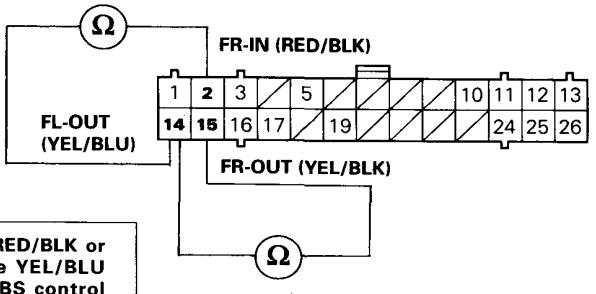

Is there continuity?

YES → **Repair short to the RED/BLK or YEL/BLK wire in the YEL/BLU wire between the ABS control unit and modulator unit.**

NO

(To page 19-78)

(cont'd)

Left-front Solenoid (cont'd)

(From page 19-77)

Connect the modulator unit 14P connector.

Measure the voltage between the ABS control unit 26P connector No. 14 (YEL/BLU) and No. 1 (RED/BLU) terminals and body ground.

Is there battery voltage?

NO → **Repair open in the YEL/BLU or RED/BLU wire between the ABS control unit and modulator unit.**

YES

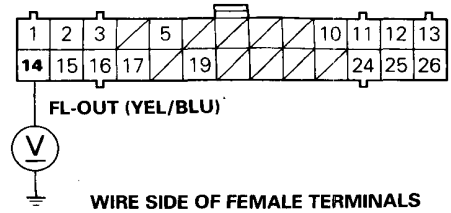

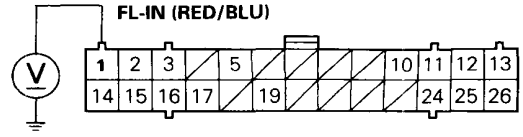

Disconnect the ABS control unit 22P connector.

Check for continuity between the ABS control unit 26P connector No. 25 (BLK) terminal and body ground.

Is there continuity?

NO → **Repair open in the BLK wire between the ABS control unit and body ground, or a poor ground.**

YES

Remove the rear fail-safe relay.

Remove the jumper wire from the front fail-safe relay connector.

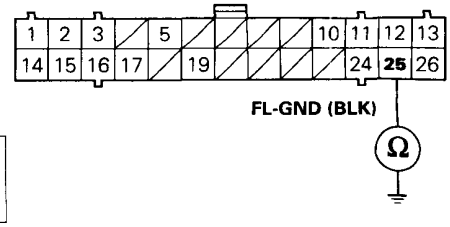

(To page 19-79)

(From page 19-78)

Check for continuity between the ABS control unit 22P connector No. 1 (YEL/GRN) terminal and body ground.

Is there continuity?

NO → **Repair short to body ground in the YEL/GRN wire between the ABS control unit and front fail-safe relay.**

YES

Connect the front fail-safe relay No. 2 (YEL/GRN) terminal to body ground with a jumper wire.

Check for continuity between the ABS control unit 22P connector No. 1 (YEL/GRN) terminal and body ground.

Is there continuity?

NO → **Repair open in the YEL/GRN wire between the ABS control unit and front fail-safe relay.**

YES

Check for continuity between the front fail-safe relay connector No. 4 (BLK) terminal and body ground.

Is there continuity?

NO → **Repair open in the BLK wire between the front fail-safe relay and body ground, or poor ground.**

YES

Check for loose ABS control unit connectors. If necessary, substitute a known-good ABS control unit and recheck.

ABS CONTROL UNIT 22P CONNECTOR

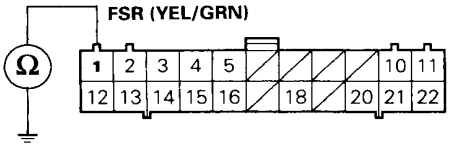

WIRE SIDE OF FEMALE TERMINALS

FRONT FAIL-SAFE RELAY CONNECTOR

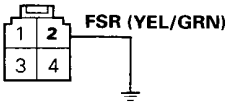

WIRE SIDE OF FEMALE TERMINALS

ABS CONTROL UNIT 22P CONNECTOR

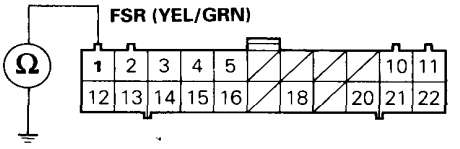

WIRE SIDE OF FEMALE TERMINALS

FRONT FAIL-SAFE RELAY CONNECTOR

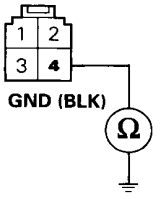

WIRE SIDE OF FEMALE TERMINALS

Rear Solenoid

Diagnostic Trouble Code (DTC) 7-4: Rear Solenoid Diagnosis

During the initial diagnosis, after the fail-safe relays are turned on, and during the regular diagnosis, the ABS control unit monitors the voltage from the battery for the six solenoids (when the ABS is not functioning).
If the detection circuit for the rear solenoids detects 0 V, the ABS control unit keeps the ABS indicator light on after the engine is started. It turns the ABS indicator light on again if it detects 0 V after the light goes off.
Possible causes:

- Rear fail-safe relay stuck OFF
- Open circuit in the rear solenoid drive circuits between the under-hood ABS fuse/relay box and ABS control unit
- Short circuit to body ground in the rear solenoid drive circuits between the solenoids and ABS control unit
- Faulty rear solenoid drive transistor (ON) in the ABS control unit

The ABS control unit momentarily outputs the ON signal to each solenoid (too momentary to turn the solenoid on) during the initial diagnosis, and each time the car is started, to check the voltage from the battery with the detection circuit. If the detection circuit for the rear solenoids detects battery voltage at this time, the ABS control unit keeps the ABS indicator light on. It turns the ABS indicator light on again if it detects the battery voltage when the car is started.
Possible causes:

- Short circuit to power in the rear solenoid drive circuits between the solenoids and ABS control unit
- Faulty rear solenoid drive transistor (OFF) in the ABS control unit
- Short circuit to power in the rear solenoid drive circuits in the modulator wire harness or solenoids
- Short circuit to the rear solenoid outlet circuit in the inlet circuit between the solenoids and ABS control unit
- Short circuit to the right-front or left-front solenoid inlet or outlet circuit in the rear solenoid inlet or outlet circuit between the solenoids and ABS control unit.

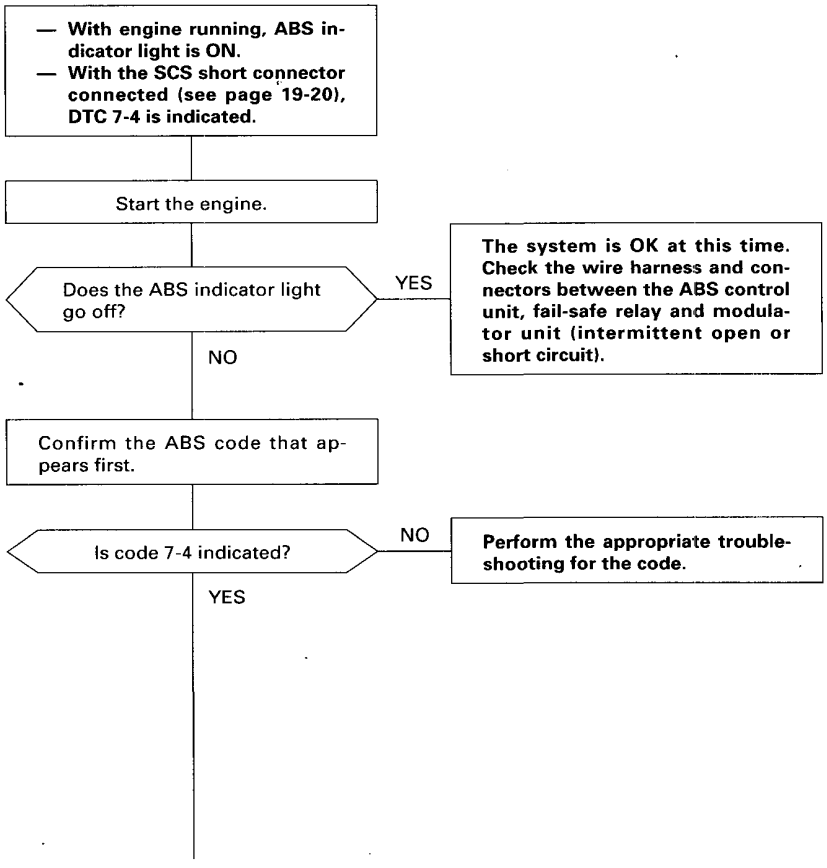

(To page 19-81)

(From page 19-80)

Remove the rear fail-safe relay.

Wire colors of the rear fail-safe relay connector: WHT, BLU/BLK, YEL/GRN, BLK

Measure the voltage between the rear fail-safe relay connector No. 1 (WHT) terminal and body ground.

Is there battery voltage?

NO → **Repair open in the WHT wire between the under-hood ABS fuse/relay box and rear fail-safe relay.**

YES

Check the rear fail-safe relay *.

* Refer to page 19-107 in the shop manual '93 ACCORD (Code NO. 62SN700).

Is the relay OK?

NO → **Replace the rear fail-safe relay.**

YES

Disconnect the modulator unit 14P connector.

Connect the rear fail-safe relay connector No. 1 (WHT) and No. 3 (BLU/BLK) terminals using a jumper wire.

Measure the voltage between the modulator unit 14P connector No. 6 (BLU/BLK) and No. 9 (BLU/BLK) terminals and body ground.

Is there battery voltage?

NO → **Repair open in the BLU/BLK wire(s) between the rear fail-safe relay and modulator unit.**

YES

(To page 19-82)

REAR FAIL-SAFE RELAY CONNECTOR

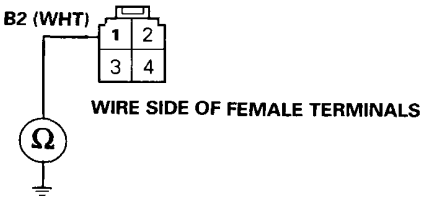

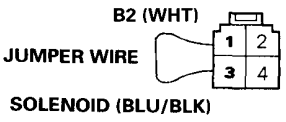

MODULATOR UNIT 14P CONNECTOR

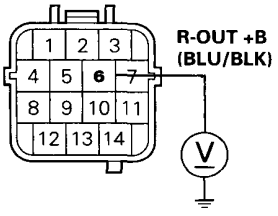

TERMINAL SIDE OF MALE TERMINALS

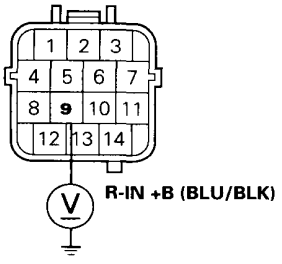

(cont'd)

Rear Solenoid (cont'd)

(From page 19-81)

Measure the resistance between the modulator unit 14P connector terminals to determine the solenoid standard resistance (A type or B type).
Inlet:
— No. 8 (WHT/BLK) and No. 12 (RED/BLK)
— No. 10 (WHT/BLU) and No. 14 (RED/BLU)
Outlet:
— No. 1 (YEL/BLK) and No. 5 (GRY/BLK)
— No. 3 (YEL/BLU) and No. 7 (GRY/BLU)

NOTE:

	STANDARD RESISTANCE	
	A TYPE	B TYPE
Inlet Solenoid	2.5 – 2.9 Ω	6.5 – 7.5 Ω
Outlet Solenoid	2.5 – 2.9 Ω	3.3 – 3.9 Ω

MODULATOR UNIT 14P CONNECTOR

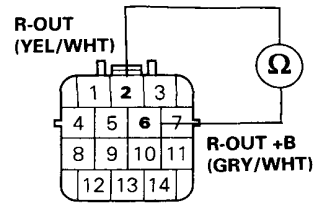

WIRE SIDE OF FEMALE TERMINALS

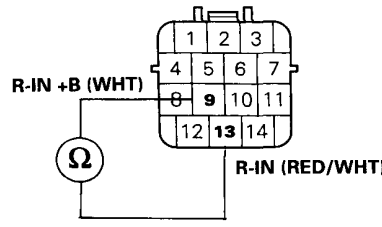

Measure the resistance between the modulator unit 14P connector No. 2 (YEL/WHT) and No. 6 (GRY/WHT) terminals, and the No. 9 (WHT) and No. 13 (RED/WHT) terminals.

Is the resistance as specified?
Inlet: 2.5 – 2.9 Ω or 6.5 – 7.5 Ω
Outlet: 2.5 – 2.9 Ω or 3.3 – 3.9 Ω

NO → **Visually inspect the modulator wire harness. If the harness is OK, replace the modulator unit. (Open or short in the rear inlet or outlet solenoid)**

YES

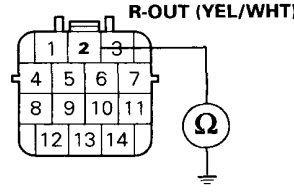

Check for continuity between the modulator unit 14P connector No. 2 (YEL/WHT) and No. 13 (RED/WHT) terminals and body ground.

Is there continuity?

YES → **Visually inspect the modulator wire harness. If the harness is OK, replace the modulator unit. (Short to body ground in the rear inlet or outlet solenoid)**

NO

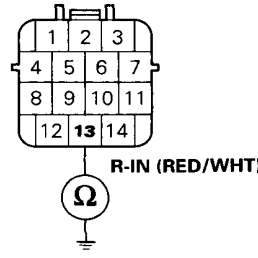

(To page 19-83)

(From page 19-82)

Check for continuity between the modulator unit 14P connector No. 2 (YEL/WHT) and No. 13 (RED/WHT) terminals.

Is there continuity?

YES → **Replace the modulator wire harness. (Short to the RED/WHT wire in the YEL/WHT wire)**

NO

Check for continuity between the modulator unit 14P connector No. 13 (RED/WHT) terminal and following terminals:
- No. 12 (RED/BLK): Right-front inlet
- No. 1 (YEL/BLK): Right-front outlet
- No. 14 (RED/BLU): Left-front inlet
- No. 3 (YEL/BLU): Left-front outlet

Is there continuity?

YES → **Replace the modulator wire harness. (Short to the RED/BLK, YEL/BLK, RED/BLU or YEL/BLU wire in the RED/WHT wire)**

NO

Check for continuity between the modulator unit 14P connector No. 2 (YEL/WHT) terminal and following terminals:
- No. 12 (RED/BLK): Right-front inlet
- No. 1 (YEL/BLK): Right-front outlet
- No. 14 (RED/BLU): Left-front inlet
- No. 3 (YEL/BLU): Left-front outlet

Is there continuity?

YES → **Replace the modulator wire harness. (Short to the RED/BLK, YEL/BLK, RED/BLU or YEL/BLU wire in the YEL/WHT wire)**

NO

(To page 19-84)

MODULATOR UNIT 14P CONNECTOR

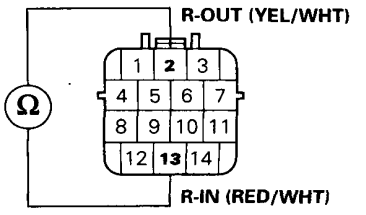

WIRE SIDE OF FEMALE TERMINALS

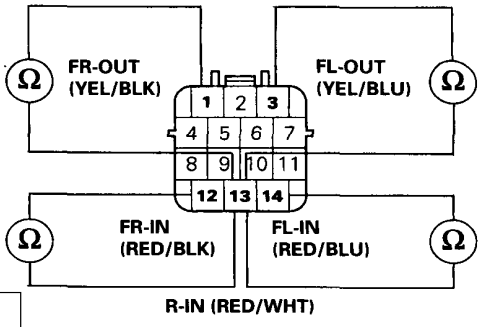

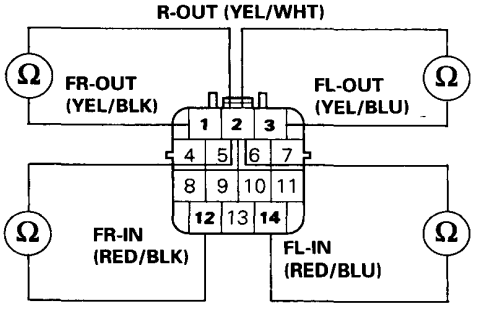

(cont'd)

Rear Solenoid (cont'd)

(From page 19-83)

Disconnect the ABS control unit 26P connector.

Check for continuity between the ABS control unit 26P connector No. 16 (YEL/WHT) and No. 3 (RED/WHT) terminals and body ground.

Is there continuity?

YES → **Repair short to body ground in the YEL/WHT or RED/WHT wire between the ABS control unit and modulator unit.**

NO

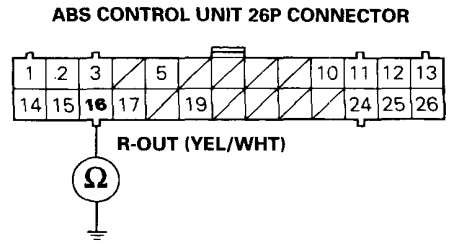

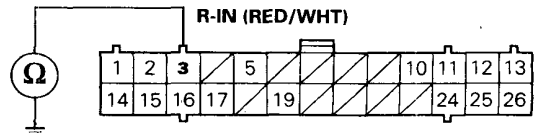

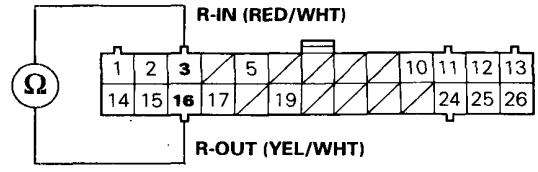

Check for continuity between the ABS control unit 26P connector No. 3 (RED/WHT) and No. 16 (YEL/WHT) terminals.

Is there continuity?

YES → **Repair short to the YEL/WHT wire in the RED/WHT wire between the ABS control unit and modulator unit.**

NO

Check for continuity between the ABS control unit 26P connector No. 3 (RED/WHT) and following terminals:
- No. 2 (RED/BLK): Right-front inlet
- No. 15 (YEL/BLK): Right-front outlet
- No. 1 (RED/BLU): Left-front inlet
- No. 14 (YEL/BLU): Left-front outlet

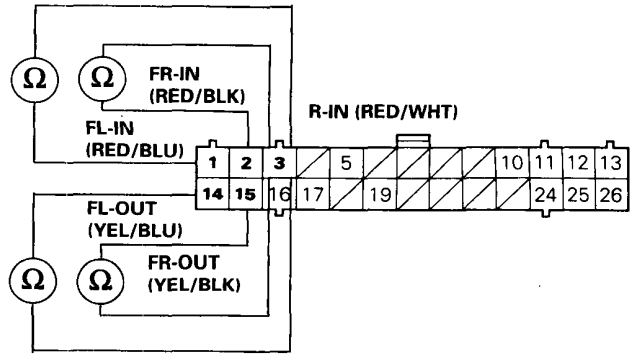

Is there continuity?

YES → **Repair short to the RED/BLK, YEL/BLK, RED/BLU or YEL/BLU wire in the RED/WHT wire between the ABS control unit and modulator unit.**

NO

(To page 19-85)

(From page 19-84)

Check for continuity between the ABS control unit 26P connector No. 16 (YEL/WHT) and following terminals:
- No. 2 (RED/BLK): Right-front inlet
- No. 15 (YEL/BLK): Right-front outlet
- No. 1 (RED/BLU): Left-front inlet
- No. 14 (YEL/BLU): Left-front outlet

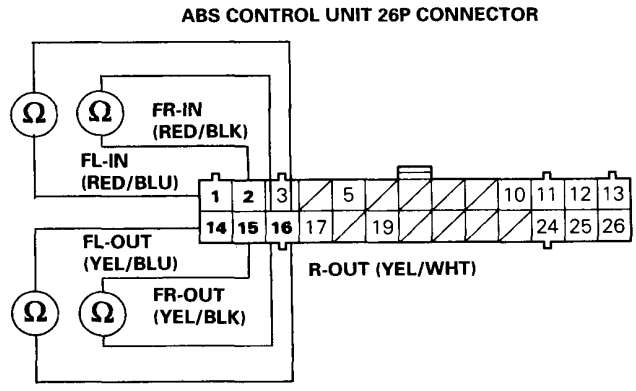

Is there continuity?

YES → **Repair short to the RED/BLK, YEL/BLK, RED/BLU or YEL/BLU wire in the YEL/WHT wire between the ABS control unit and modulator unit.**

NO

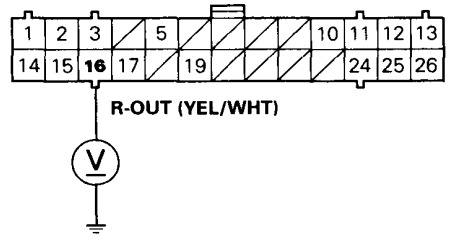

Connect the modulator unit 14P connector.

Measure the voltage between the ABS control unit 26P connector No. 16 (YEL/WHT) and No. 3 (RED/WHT) terminals and body ground.

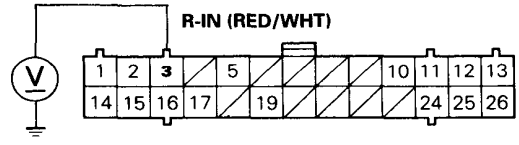

Is there battery voltage?

NO → **Repair open in the YEL/WHT or RED/WHT wire between the ABS control unit and modulator unit.**

YES

Disconnect the ABS control unit 22P connector.

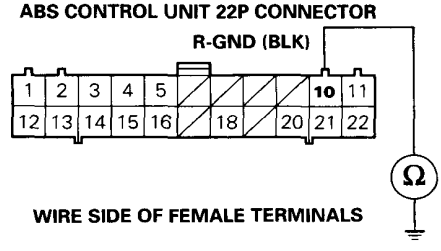

Check for continuity between the ABS control unit 22P connector No. 10 (BLK) terminal and body ground.

Is there continuity?

NO → **Repair open in the BLK wire between the ABS control unit and body ground, or a poor ground.**

YES

(To page 19-86)

(cont'd)

Rear Solenoid (cont'd)

(From page 19-85)

Remove the jumper wire from the rear fail-safe relay connector.

Remove the front fail-safe relay.

Check for continuity between the ABS control unit 22P connector No. 1 (YEL/GRN) terminal and body ground.

Is there continuity?

- YES → **Repair short to body ground in the YEL/GRN wire between the ABS control unit and rear fail-safe relay.**
- NO ↓

Connect the rear fail-safe relay connector No. 2 terminal to body ground with a jumper wire.

Check for continuity between the ABS control unit 22P connector No. 1 (YEL/GRN) terminal and body ground.

Is there continuity?

- NO → **Repair open in the YEL/GRN wire between the ABS control unit and rear fail-safe relay.**
- YES ↓

Remove the jumper wire from the rear fail-safe relay connector.

Check for continuity between the rear fail-safe relay connector No. 4 (BLK) terminal and body ground.

Is there continuity?

- NO → **Repair open in the BLK wire between the rear fail-safe relay and body ground, or poor ground.**
- YES ↓

Check for loose ABS control unit connectors. If necessary, substitute a known-good ABS control unit and recheck.

ABS CONTROL UNIT 22P CONNECTOR

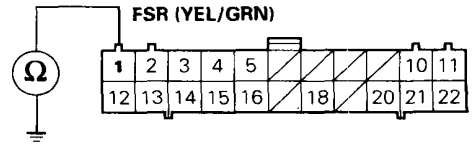

WIRE SIDE OF FEMALE TERMINALS

REAR FAIL-SAFE RELAY CONNECTOR

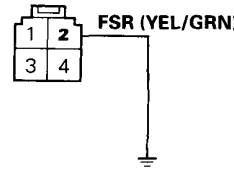

WIRE SIDE OF FEMALE TERMINALS

ABS CONTROL UNIT 22P CONNECTOR

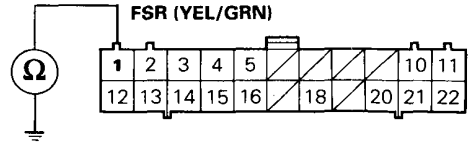

WIRE SIDE OF FEMALE TERMINALS

REAR FAIL-SAFE RELAY CONNECTOR

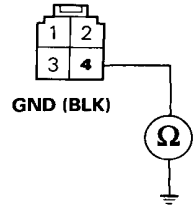

WIRE SIDE OF FEMALE TERMINALS

ABS Function

Diagnostic Trouble Code (DTC) 8-1: ABS Function Diagnosis

The ABS control unit monitors the ABS functioning time during regular diagnosis, and it turns the ABS indicator light on if the ABS is functioning for a prolonged time.
Possible causes:

- Wheel sensor signal disappears at speeds of 6 mph (10 km/h) or less
- Faulty ABS control unit

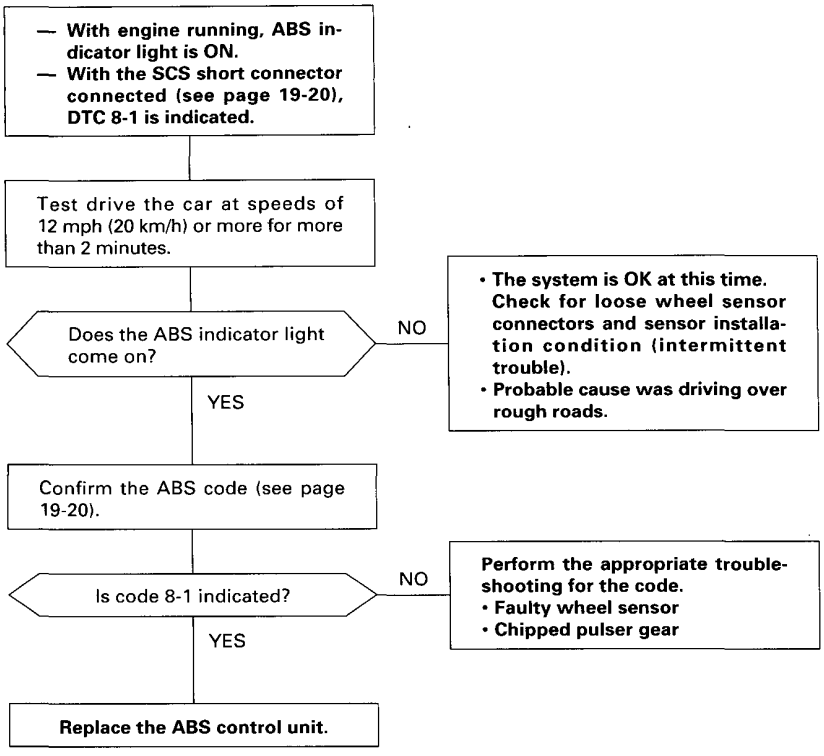

ABS Control Unit

Diagnostic Trouble Code (DTC) 8-2: CPU Comparison Diagnosis

The ABS control unit checks the data of the two CPUs by comparison, and it keeps the ABS indicator light on if there are any differences in the data between the CPUs. It turns the ABS indicator light on again if it detects any difference after the light goes off.

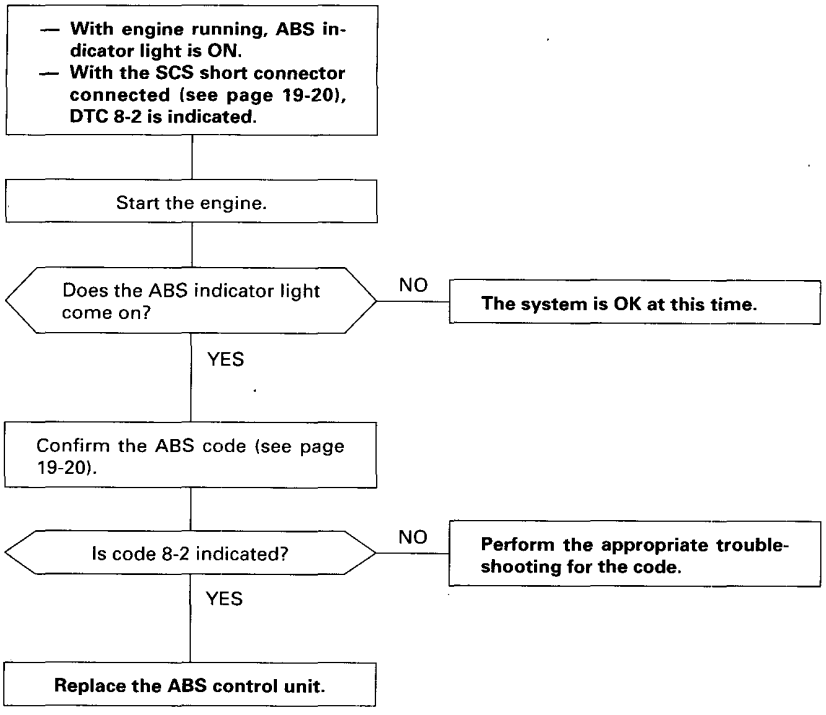

Diagnostic Trouble Code (DTC) 8-4: IC (Intergrated Circuit) Diagnosis

The ABS control unit checks the internal ICs during the initial diagnosis and regular diagnosis, and it keeps the ABS indicator light on if it detects any abnormality. It turns the ABS indicator light on again if it detects any abnormality after the light goes off.

Replace the ABS control unit if DTC 8-4 is indicated with the SCS service connector connected (see page 19-20).

ABS Function Test

1. Raise the car off the ground and support it with safety stands (refer to following section 1 in the shop manual '93 ACCORD (Code No. 62SN700)).

2. Check that there is no brake drag.

3. Turn the ignition switch ON and confirm that the ABS indicator light comes on.

   - If the ABS indicator light does not come on, follow the troubleshooting on page 19-26.

4. With the ignition switch OFF, disconnect the ABS inspection connector (6P) from the connector cover located under the glove box, and connect it to the ALB checker.

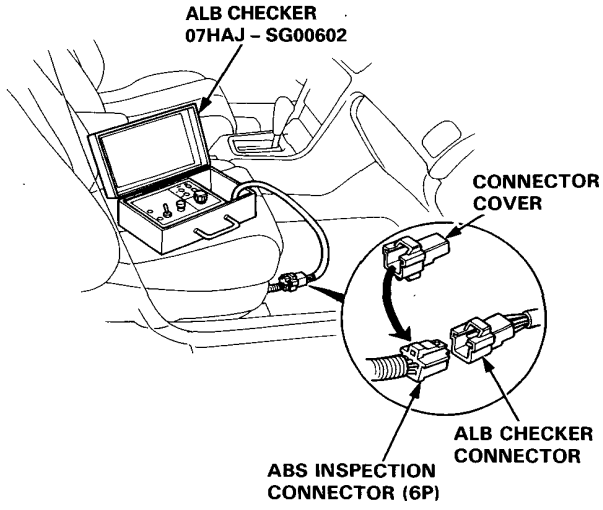

5. Shift the transmission to neutral for manual transmission models, or to [P] position for automatic transmission models.

6. Start the engine and release the parking brake.

7. Set the pulse selector switch to "50".

8. Turn the Mode Selector switch to "1".

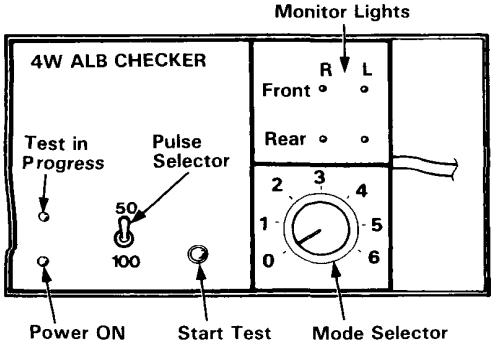

9. Push the Start Test switch.
   The ABS indicator light should not come on while the Test in Progress light is on.

   - If the ABS indicator light comes on, confirm the ABS code and perform the appropriate troubleshooting for the code.

   NOTE: Do not turn the Mode Selector switch when the Test in Progress light is on. Damage to the ALB checker can result.

10. Turn the Mode Selector switch to "2".

11. Depress the brake pedal firmly and push the Start Test switch.
    The ABS indicator light should not come on while the Test in Progress light is on. There should be kickback on the brake pedal.

    Have the assistant check that the wheel controlled by the ABS can be rotated by hand when there is kickback on the brake pedal.

    - If the ABS indicator light comes on, confirm the ABS code and perform the appropriate troubleshooting for the code.
    - If the ABS indicator light does not come on and the wheel controlled by the ABS cannot be rotated, check the connection of the modulator wire harness connectors. If the connections are OK, replace the modulator unit.

    NOTE: The kickback should occur approximately 20 seconds after the Start Test switch is pushed.
    The ABS can be checked with a brake tester, too, by checking the brake torque fluctuation of the wheel controlled by the ABS.

12. Turn the Mode Selector switch to "3", "4" and "5". Perform step 10 for each of the test mode positions.

(cont'd)

Operation Sequence Simulated by Modes of ALB Checker

NOTE: The wheel sensors and sensor wire harnesses are not checked by the ALB checker.

Mode 1: Sends the simulated driving signal 0 mph (0 km/h) → 113 mph (180 km/h) → 0 mph (0 km/h) of each wheel to the ABS control unit to check the system under the normal driving. There should be no kickback.

SIMULATED DRIVING SIGNAL

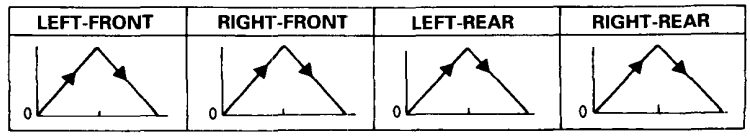

Mode 2: Sends the driving signal of each wheel, then sends the lock signal of the left-rear wheel to the ABS control unit to check the system under left-rear wheel lock. There should be kickback.

SIMULATED DRIVING SIGNAL

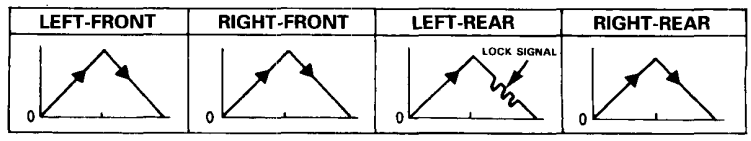

Mode 3: Sends the driving signal of each wheel, then sends the lock signal of the right-rear wheel to the ABS control unit to check the system under right-rear wheel lock. There should be kickback.

SIMULATED DRIVING SIGNAL

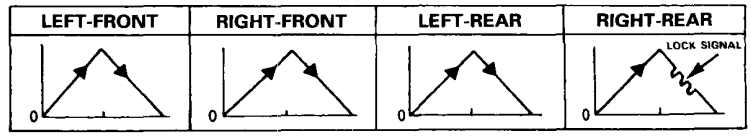

Mode 4: Sends the driving signal of each wheel, then sends the lock signal of the left-front wheel to the ABS control unit to check the system under left-front wheel lock. There should be kickback.

SIMULATED DRIVING SIGNAL

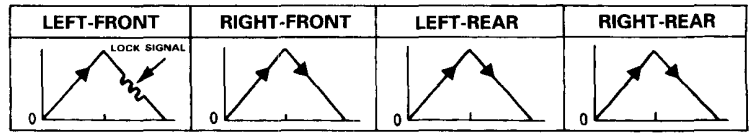

Mode 5: Sends the driving signal of each wheel, then sends the lock signal of the right-front wheel to the ABS control unit to check the system under right-front wheel lock. There should be kickback.

SIMULATED DRIVING SIGNAL

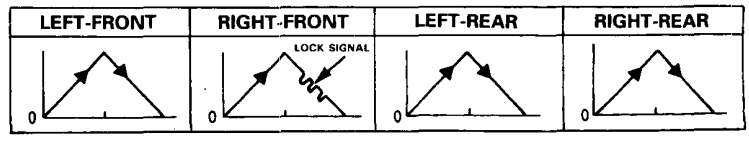

Inspection Points

If the ABS indicator light comes on and the system stops during the inspection, confirm the ABS code and perform the appropriate troubleshooting for the code.

If there is no kickback in modes 2 through 5, and the ABS indicator light does not come on, the following items are probable causes:

- Pressure switch stuck ON
- Clogged or stuck solenoid outlet valve
- Modulator wire harness connectors improperly connected

Modulator Function Check

NOTE: This inspection determines whether the basic brake system continues to operate normally when the modulator unit fluid pressure is low.

CAUTION:
- **This inspection is made by relieving the high-pressure fluid in the modulator unit and checking for brake operation. After inspection, be sure to add fresh brake fluid to the specified level of the reservoir, and start the engine to restore the ABS to its normal operating condition.**
- **Do not spill brake fluid on the car; it may damage the paint; if brake fluid does contact the paint, wash it off immediately with water.**
- **Do not reuse the drained brake fluid.**
- **Do not loosen the relief plug on the accumulator.**

1. Remove the bleeder cap from the maintenance bleeder on the modulator unit.
2. Attach the wrench to the maintenance bleeder.
3. Connect a rubber tube of the appropriate diameter to the maintenance bleeder, and set the other end of the rubber tube in a suitable container.
4. While holding the rubber tube with your hand, slowly loosen the maintenance bleeder 1/8 to 1/4 turn to collect the brake fluid in the container.

   CAUTION: Do not loosen the maintenance bleeder too much. The high-pressure brake fluid can burst out.
5. After the brake fluid stops flowing out, loosen the maintenance bleeder more to release the pressure completely.
6. Tighten the maintenance bleeder to the specified torque.

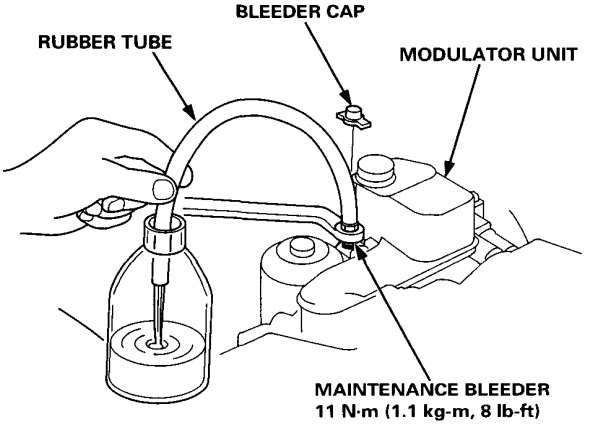

7. Raise the car off the ground and support with safety stands.
8. Have an assistant depress the brake pedal firmly, and check that the wheels do not rotate.

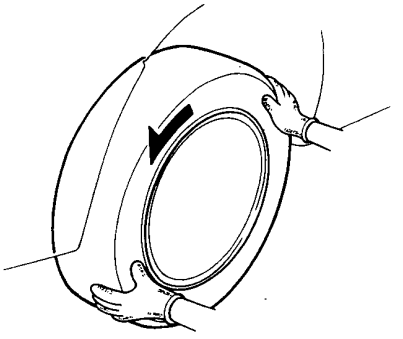

9. Remove the cap and refill the reservoir to the MAX (upper) level with fresh brake fluid.

   NOTE: Pour the brake fluid slowly so that it does not foam, and wait for a few minutes.
10. Start the engine and let it idle for a minute. Stop the engine.
11. Check the brake fluid level in the reservoir. It should be below the MAX (upper) level line. Refill the reservoir with fresh brake fluid to the MAX level line again.

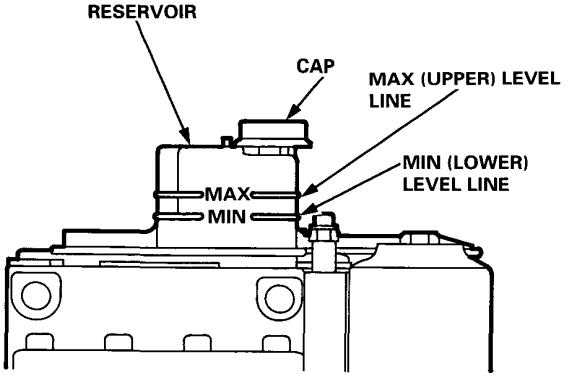

12. After inspection, start the engine and make sure that the ABS indicator light goes off.

Modulator Unit

Relieving System Pressure

CAUTION:
- **Be sure to drain the high-pressure brake fluid completely before performing the modulator function check, disposing the modulator unit, and ABS pump motor replacement.**
- **Do not spill brake fluid on the car; it may damage the paint; if brake fluid does contact the paint, wash it off immediately with water.**
- **Do not reuse the drained brake fluid.**
- **Do not loosen the relief plug on the accumulator.**

1. Remove the bleeder cap from the maintenance bleeder on the modulator unit.
2. Attach the wrench to the maintenance bleeder.
3. Connect a rubber tube of the appropriate diameter to the maintenance bleeder, and set the other end of the rubber tube in a suitable container.
4. While holding the rubber tube with your hand, slowly loosen the maintenance bleeder 1/8 to 1/4 turn to collect the brake fluid in the container.

   CAUTION: Do not loosen the maintenance bleeder too much. The high-pressure brake fluid can burst out.
5. Tighten the maintenance bleeder to the specified torque.

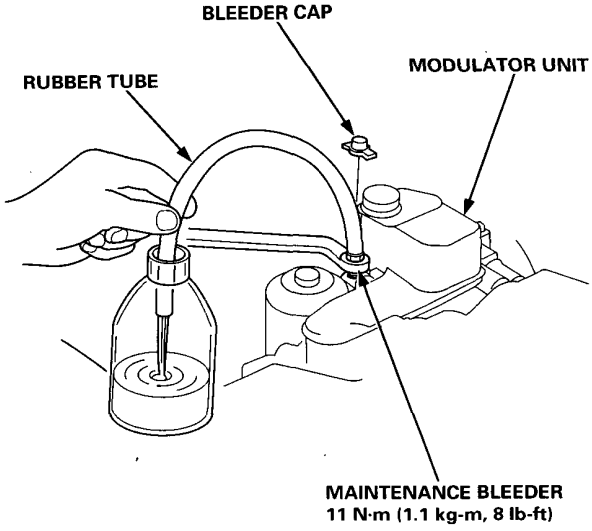

Brake Fluid Replacement/Bleeding

CAUTION:
- **Do not loosen the relief plug on the accumulator.**

NOTE: Brake fluid replacement procedure explained in this section is for the brake *fluid in the* modulator unit (that is, the brake fluid in the high-pressure passage and in the reservoir). Refer to section 19 in the shop manual ('93 ACCORD Code No. 62SN700) for the brake fluid replacement procedures for the rest of the brake system.

1. Remove the bleeder cap from the maintenance bleeder on the modulator unit.
2. Attach the wrench to the maintenance bleeder.
3. Connect a rubber tube of the appropriate diameter to the maintenance bleeder, and set the other end of the rubber tube in a suitable container.
4. While holding the rubber tube with your hand, slowly loosen the maintenance bleeder 1/8 to 1/4 to collect the brake fluid in the container.

   CAUTION: Do not loosen the maintenance bleeder too much. The high-pressure brake fluid can burst out.
5. Tighten the maintenance bleeder.

   NOTE: Do not remove the rubber tube and wrench yet.

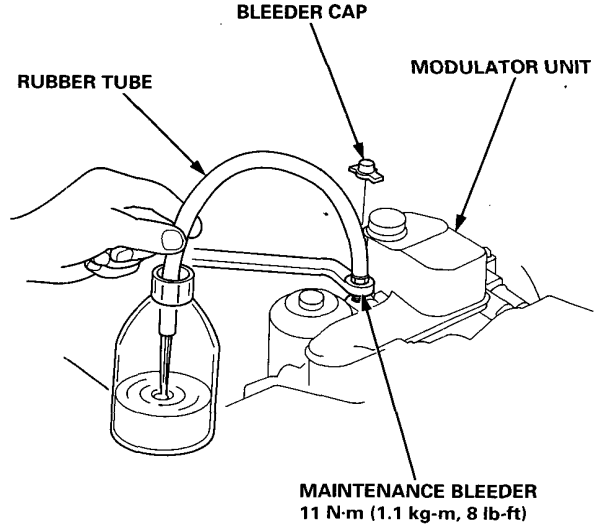

6. Start the engine and let it idle for a minute. Stop the engine.

7. Check the brake fluid level in the reservoir. It should be below the MAX (upper) level line.

8. Repeat the steps 4 through 7 to drain the rest of the brake fluid from the modulator unit.

   NOTE: The modulator has a capacity of approximately 150 cc (5.1 fl·oz, 5.3 Imp·oz). Approximately 40 – 45 cc (1.3 – 1.5 fl·oz, 1.4 – 1.6 Imp·oz) of the fluid is drained at each try.

9. Remove the cap, and refill the reservoir to the MAX (upper) level with fresh brake fluid.

   NOTE: Pour the brake fluid slowly so that it does not foam, and wait for a few minutes.

10. Repeat steps 4 through 7 twice, and refill the reservoir to the MAX (upper) level with fresh brake fluid.

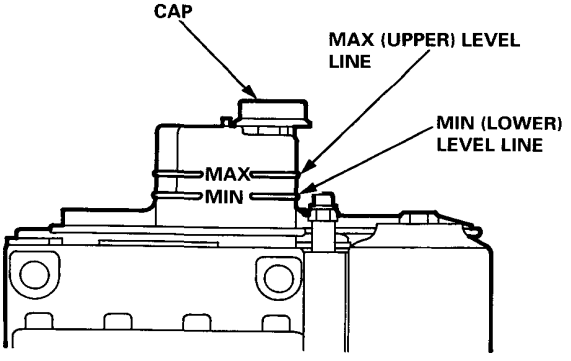

11. Tighten the maintenance bleeder to the specified torque.

12. After replacement, start the engine and make sure that the ABS indicator light goes off.

Bleeding:

When the brake fluid is completely drained from the reservoir (air enters in the modulator unit) during brake fluid replacement, bleed the air from the modulator unit as follows.

–1. Fill the reservoir to the MAX (upper) level with fresh brake fluid.

–2. Connect the rubber tube to the bleeder on the modulator unit, and set the other end of the rubber tube in a container (see the previous page).

–3. Loosen the bleeder, and start the engine to activate the pump motor.

   NOTE: Take care not to spill the brake fluid from the container.

–4. Tighten the bleeder when the fluid starts to flow out of the bleeder.

–5. Stop the engine after the pump motor stops.

   NOTE: If the ABS indicator light comes on and the pump motor stops, restart the engine and repeat steps 3 through 5 above.

Modulator Unit

Removal/Installation

Removal:

CAUTION:

- **When removing the modulator unit or after removing it, be careful not to turn it upside-down or lean excessively.**
- **Do not spill brake fluid on the car; it may damage the paint; if brake fluid does contact the paint, wash it off immediately with water.**
- **Take care not to damage or deform the brake pipes during removal and installation.**
- **To prevent the brake fluid from flowing, plug and cover the hose ends and joints with a shop towel or equivalent material.**
- **Do not loosen the relief plug on the accumulator.**

NOTE: LHD type is shown, RHD type is symmetrical.

WIRE HARNESS CLIP/BAND

NOTE: When a new clip and band are installed, adjust them to the dimensions as shown below.

1. Disconnect the modulator unit 14P connector and pump motor 2P connector.
2. Remove the wire harness clip from the modulator bracket.
3. Remove the three 8 mm nuts, and remove the modulator unit from the bracket.

   NOTE: When the pump motor or the modulator unit is replaced, bleed the high-pressure brake fluid first (see page 19-92).

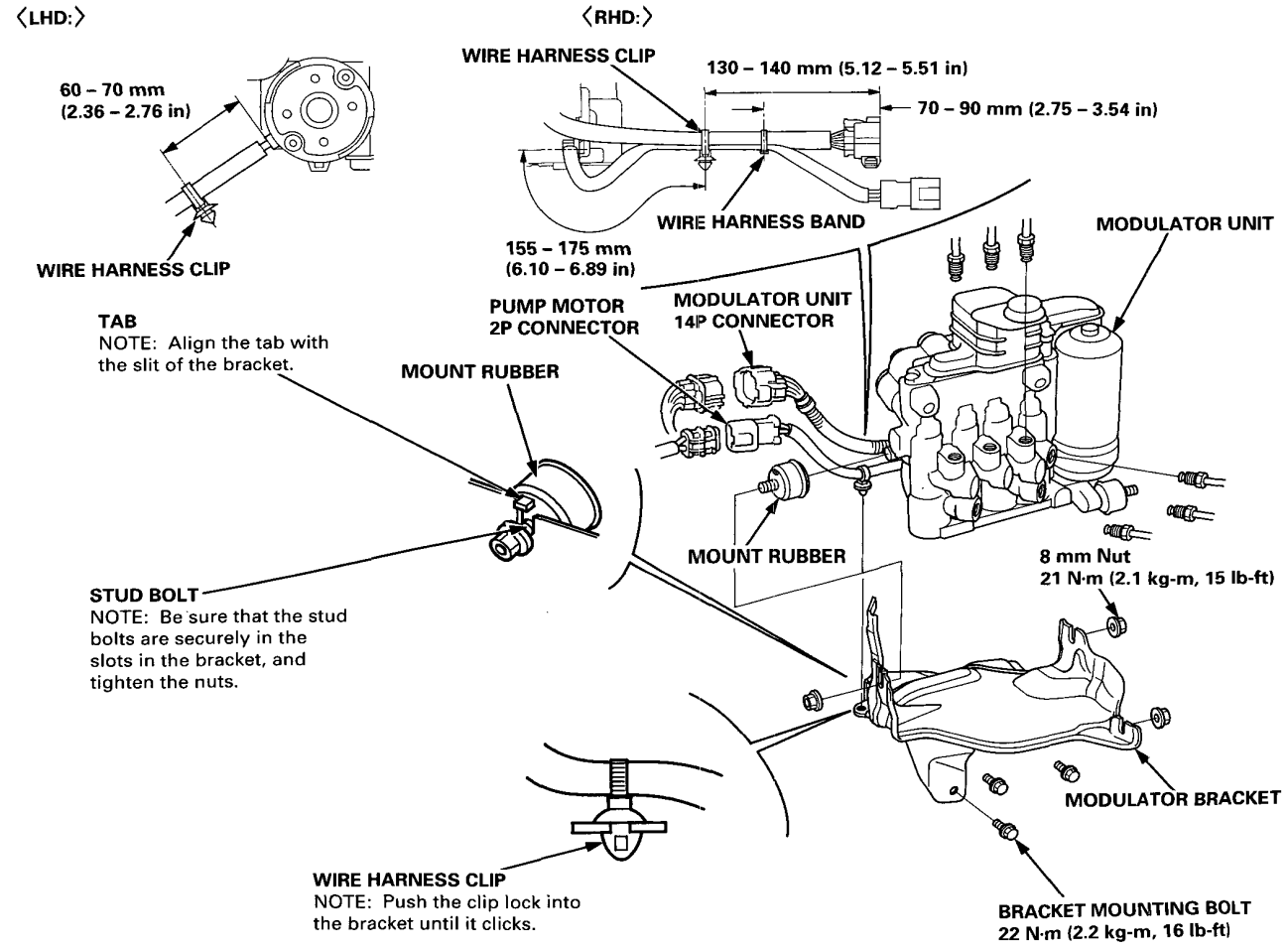

Installation:

1. Check whether the brake fluid level in the reservoir is at the MAX (upper) level.
   If level is low, add fresh brake fluid to the MAX (upper) level.

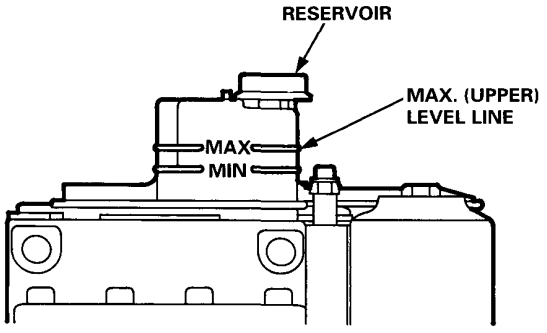

2. Before installing the modulator unit on the car, be sure to bleed the air from the suction port in the modulator unit by leaning the modulator unit to one side slowly (about 45 degrees) as shown.

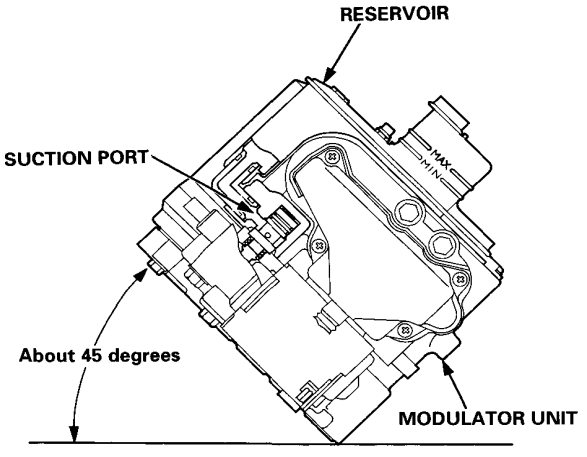

CAUTION: When installing the modulator unit, be careful not to turn it upside-down or lean excessively.

3. Install the modulator unit in the reverse order of removal.

   NOTE: Check the letters stamped on the modulator body, and connect the brake pipes properly.
   Tighten the flare nuts to 19 N·m (1.9 kg-m, 14 lb-ft).

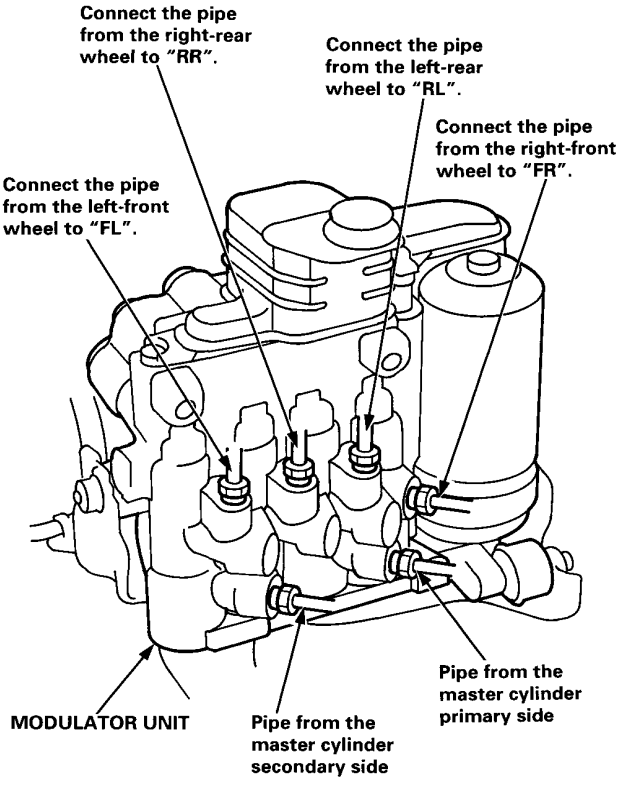

4. Start the engine and let it idle for a minute.
   Check that:
   - ABS indicator light is off.
   - Brake fluid is not leaking from the brake pipe joints.

5. Stop the engine.

6. Check whether the brake fluid level in the reservoir is at the MAX (upper) level.
   If level is low, add fresh fluid until the reservoir is refilled to the MAX (upper) level.

7. Bleed air from the brake system (refer to section 19 in the shop manual '93 ACCORD Code No. 62SN700).

8. Check the ABS function using the ALB checker (see page 19-89).

Modulator Unit

Wire Harness Replacement

1. Remove the modulator unit from the car (see page 19-94).

2. Remove the modulator unit cover, and remove the wire harness.

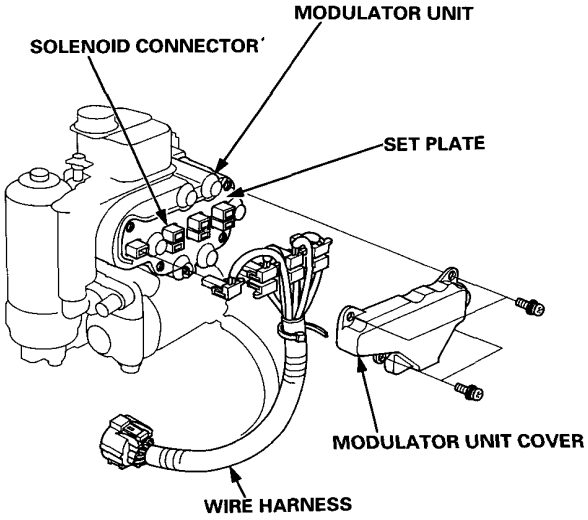

3. Check the numbers stamped on the set plate, and connect each connector of the new wire harness to the set plate of the corresponding number.

   NOTE: Be sure that each connector is locked securely with the two locking tabs.

4. Install the modulator unit cover and modulator unit (see the left column of this page).

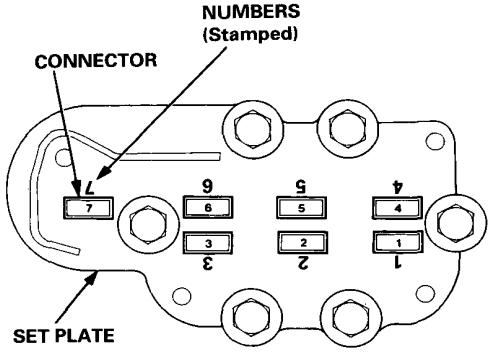

5. Check the ABS function using the ALB checker (see page 19-89).

Pump Moor Replacement

⚠WARNING The modulator unit contains high-pressure brake fluid. Be sure to bleed the high-pressure fluid from the modulator unit before removing the pump motor.

1. Bleed the high-pressure brake fluid from the modulator unit (see page 19-92).

2. Remove the modulator unit from the car (see page 19-94).

3. Remove the 8 mm flange bolts from the modulator unit, and remove the pump motor.

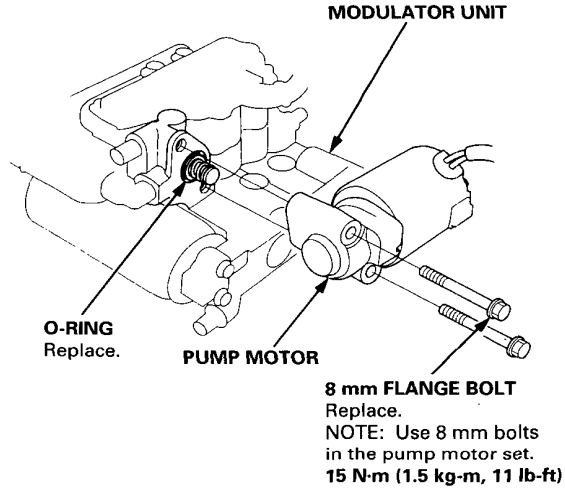

4. Install the pump motor in the reverse order of removal.

   NOTE:
   - After installing the modulator unit, add fresh brake fluid until the reservoir is refilled to the specified level, and bleed air from the system (see page 19-92).
   - Turn the ignition switch on, and check for the ABS indicator light operation.

Disposal

⚠WARNING The accumulator contains high pressure nitrogen gas. Do not puncture, expose to flame, weld, drop or apply impact to the accumulator, or attempt to remove the accumulator from the modulator unit. The modulator unit may explode and severe personal injury may result.

1. Drain the high-pressure brake fluid from the modulator unit (see page 19-92).
2. Secure the modulator unit in a vise so that the relief plug points straight up.
3. Loosen the relief plug three and a half turns slowly, and wait for three minutes for all pressure to escape.
4. Remove the accumulator from the modulator unit.
5. Remove the relief plug completely and dispose of the accumulator.

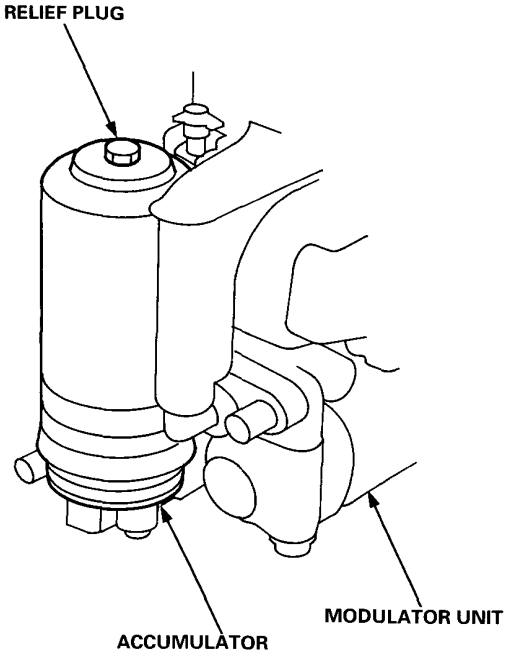

ABS Control Unit Replacement

SRS wire harnesses are rounted near the ABS control unit.

CAUTION:
- **All SRS electrical wiring harnesses are covered with yellow insulation.**
- **Before disconnecting any part of the SRS wire harness, connect the short connectors.**
- **Replace the entire affected SRS harness assembly if it has an open circuit or damaged wiring.**

1. Remove the front console. (refer to section 20 in the shop manual '93 ACCORD Code No. 62SN700)
2. Disconnect the ABS control unit connectors.
3. Remove the ABS control unit mounting bolts and remove it.

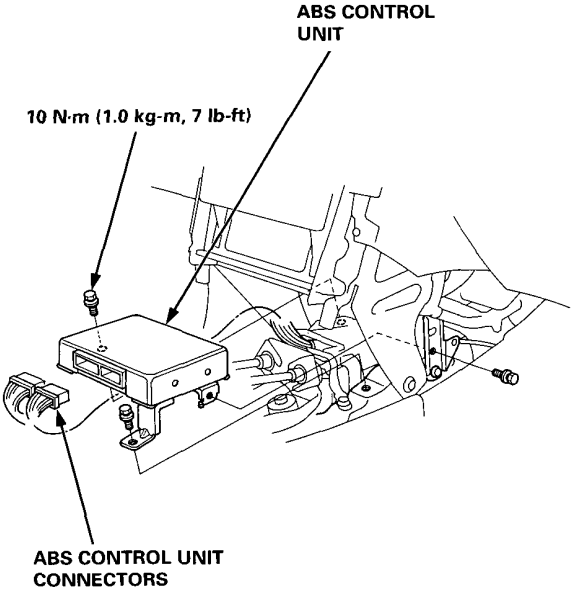

4. Install the ABS control unit in the reverse order of removal.
5. Install the front console. (refer to section 20 in the shop manual '93 ACCORD Code No. 62SN700)

Body

Doors

Front Door Index 20-2
Rear Door Index 20-3

Outline of Model Change

- Some protectors of the doors have been added.

Front Door Index

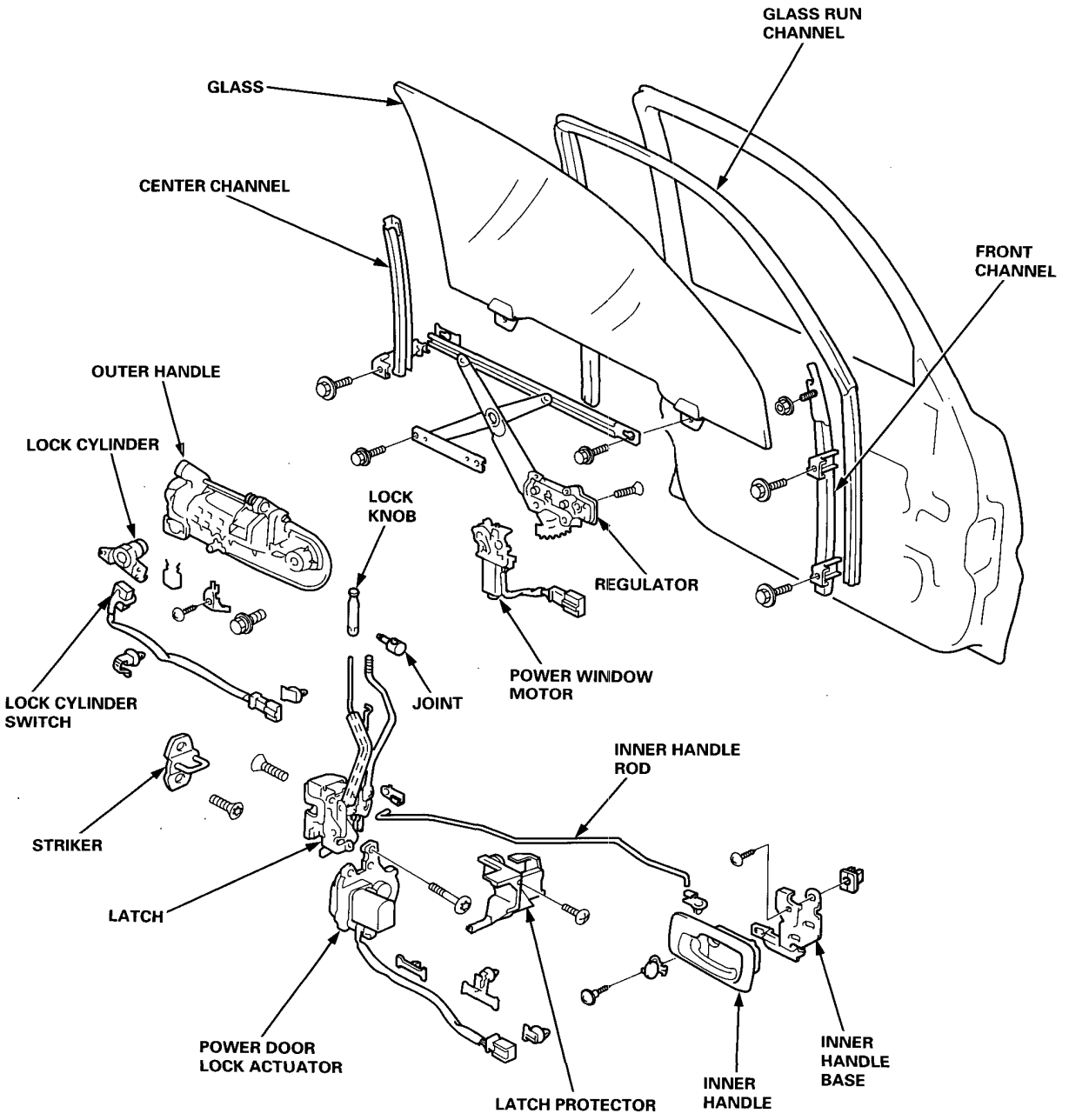

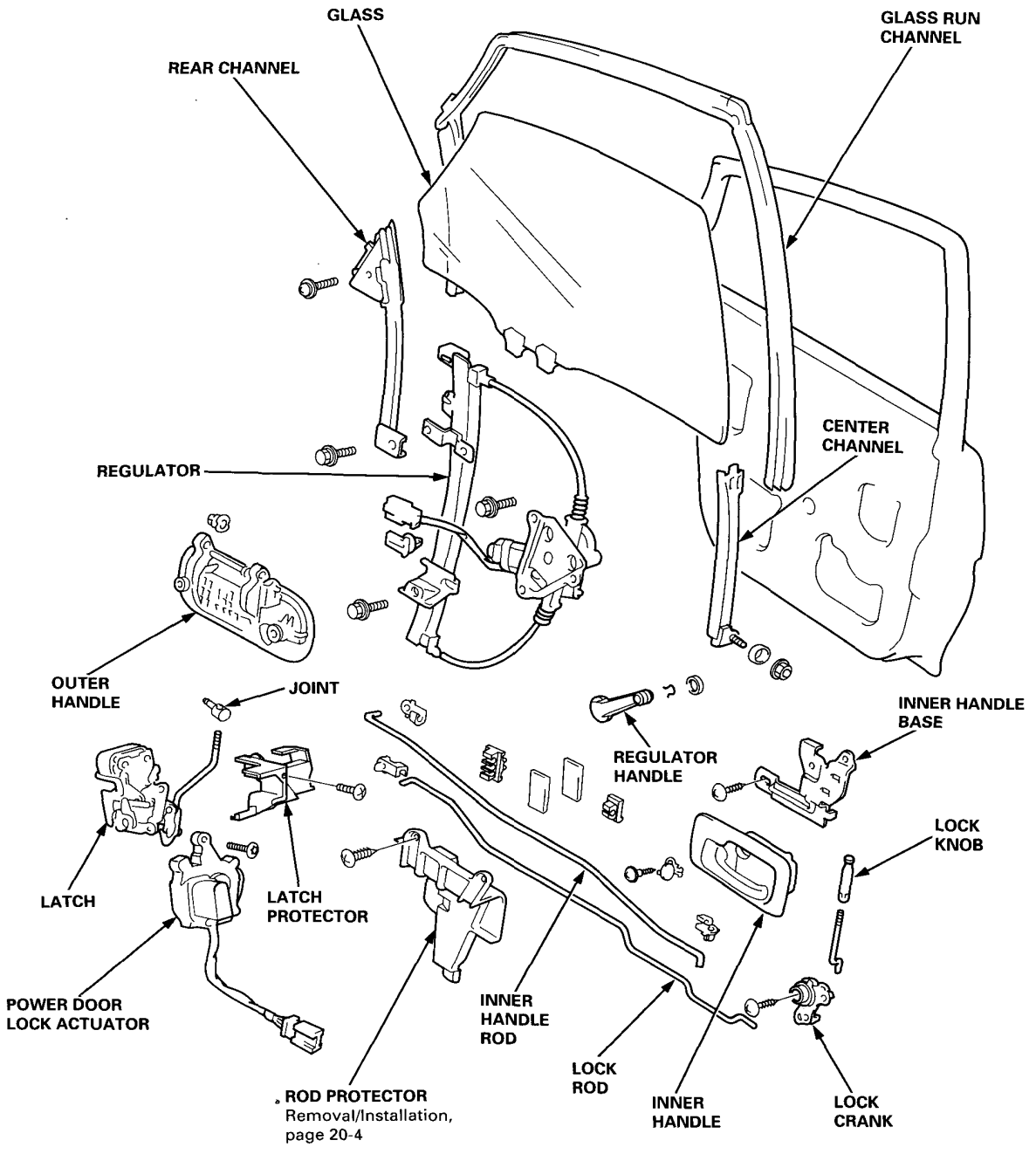
GLASS
GLASS RUN CHANNEL
REAR CHANNEL
CENTER CHANNEL
REGULATOR
OUTER HANDLE
JOINT
INNER HANDLE BASE
REGULATOR HANDLE
LOCK KNOB
LATCH
LATCH PROTECTOR
POWER DOOR LOCK ACTUATOR
INNER HANDLE ROD
LOCK ROD
INNER HANDLE
LOCK CRANK
ROD PROTECTOR
Removal/Installation, page 20-4

Rod Protector Removal/Installation

1. Remove:
   - Door panel
   - Plastic cover (as necessary)

2. Remove the screws. Detach the hook, then remove the rod protector.

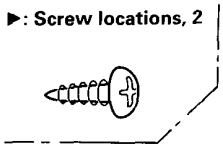

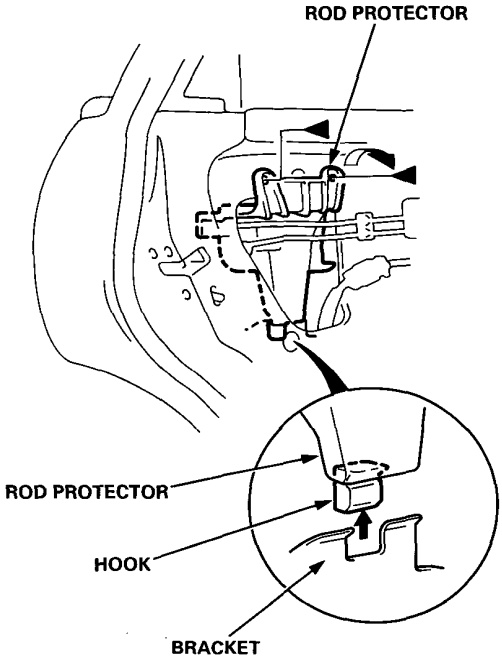

3. Installation is the reverse of the removal procedure.

   NOTE: Make sure the hook is inserted securely to the bracket.

SUPPLEMENTAL RESTRAINT SYSTEM (SRS)

There are two types of SRS used for the Accord:
— Type II (SRS unit is part of the airbag assembly) has only a driver's airbag, located in the steering wheel hab, and is standard equipment or option on some model versions.
— Type III (SRS unit is not part of the airbag assembly and has built-in sensors) has both a driver's airbag, located in the steering wheel hab, and a front passenger's airbag, located in the dashboard above the glove box, and is standard equipment on some model versions.

Information necessary to safely service the SRS is included in this Shop Manual. Items marked with an asterisk (*) on the contents page include, or are located near, SRS components. Servicing, disassembling or replacing these items will require special precautions and tools, and should therefore be done by an authorized Honda dealer.

⚠ WARNING

- **To avoid rendering the SRS inoperative, which could lead to personal injury or death in the event of a severe frontal collision, all SRS service work must be performed by an authorized Honda dealer.**
- **Improper service procedures, including incorrect removal and installation of the SRS, could lead to personal injury caused by unintentional activation of the airbags.**
- **Do not bump the SRS unit. Otherwise, the system may fail in case of a collision, or the airbags may deploy when the ignition switch is ON (II) (SRS Type III).**
- **All SRS electrical wiring harnesses are covered with yellow insulation. Related components are located in the steering column, front console, dashboard, dashboard lower panel, and, in case of the SRS Type III, in the dashboard above the glove box. Do not use electrical test equipment on these circuits.**
- **Service work nearby and in the areas listed below may affect the SRS and must therefore be performed by an authorized Honda dealer.**

SRS Type II:
- Steering wheel (Be careful not to bump the steering wheel as the SRS unit (sensors), inflator, etc. are located in it.)
- Behind the dashboard
- Under-dash fuse/relay box

SRS Type III:
- Steering wheel
- Behind the dashboard
- Under-dash fuse/relay box
- Front console
- Car stereo units and other accessories
- A/C heater

Electrical

Special Tools 23-2
Relay and Control Unit Locations
Engine Compartment 23-3
Dashboard 23-4
Floor 23-6
Wire Harness and Ground Locations
Engine Compartment (RHD) 23-7
Floor 23-8
Fuses
Under-hood ABS Fuse/ Relay Box 23-9
Under-hood Fuse/Relay Box 23-10
Under-dash Fuse/Relay Box 23-12
Power Distribution 23-14
Ground Distribution 23-15
*Gauge Assembly
Terminal Locations 23-25
Circuit Diagram 23-26
Bulb Locations 23-27
A/T Gear Position Indicator
Circuit Diagram 23-28
Trunk Light
Trunk Light Test/Replacement 23-29
Wiper/Washers
Headlight Washer Switch Test/ Replacement (KE) 23-29
*Horns
Circuit Diagram 23-30
Switch Test 23-32
*Cruise Control (KE)
Component Location Index 23-37
Circuit Diagram 23-39
Troubleshooting 23-41
*Supplemental Restraint System (SRS) Type II 23-55
*Supplemental Restraint System (SRS) Type III 23-67

*Read SRS precautions on page 23-71, then install the short connectors on the airbags before working in these areas.

Outline of Model Changes

- Gauge Assembly: Cruise light has been added and SRS indicator light circuit has been changed.
- A/T Gear Position Indicator: The circuit has been changed.
- Trunk Light: The trunk light has been changed.
- Wiper/Washers: The location of the KE headlight washer switch has been changed.
- Horns: The horn system has been changed.
- Cruise Control: The cruise control system has been added to the KE model.
- Supplemental Restraint System (SRS): The harnesses of the SRS Type II have been changed, and the SRS Type III has been added.

All of the above-mentioned changes and ABS system changes have been reflected in Relay and Control Unit Locations, Wire Harness and Ground Locations, Power Distribution, and Ground Distribution.

Special Tools

Ref. No.	Tool Number	Description	Qty.	Page Reference
①	07PAZ – 0010100	SCS Short Connector	1	23-77
②	07HAZ – SG00500	Deployment Tool	1	23-110
③	07MAZ – SP00100	Short Connector A Set	1	23-84
④	07MAZ – SP00500	Test Harness B	1	23-82
⑤	07LAZ – SL40300	Test Harness C	1	23-84
⑥	07QAZ – SR30100	Jumper Wire	4	23-82

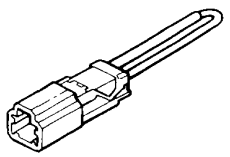

①

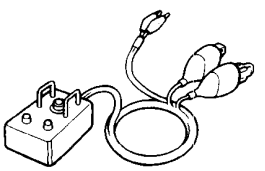

②

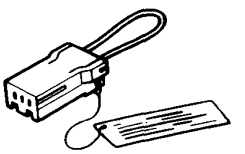

③

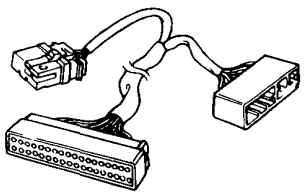

④

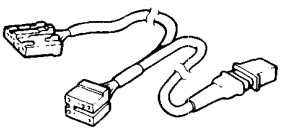

⑤

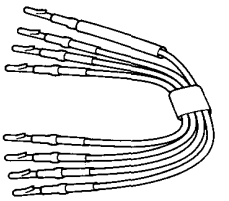

⑥

Relay and Control Unit Locations

Engine Compartment

NOTE: LHD type is shown, RHD type is similar.

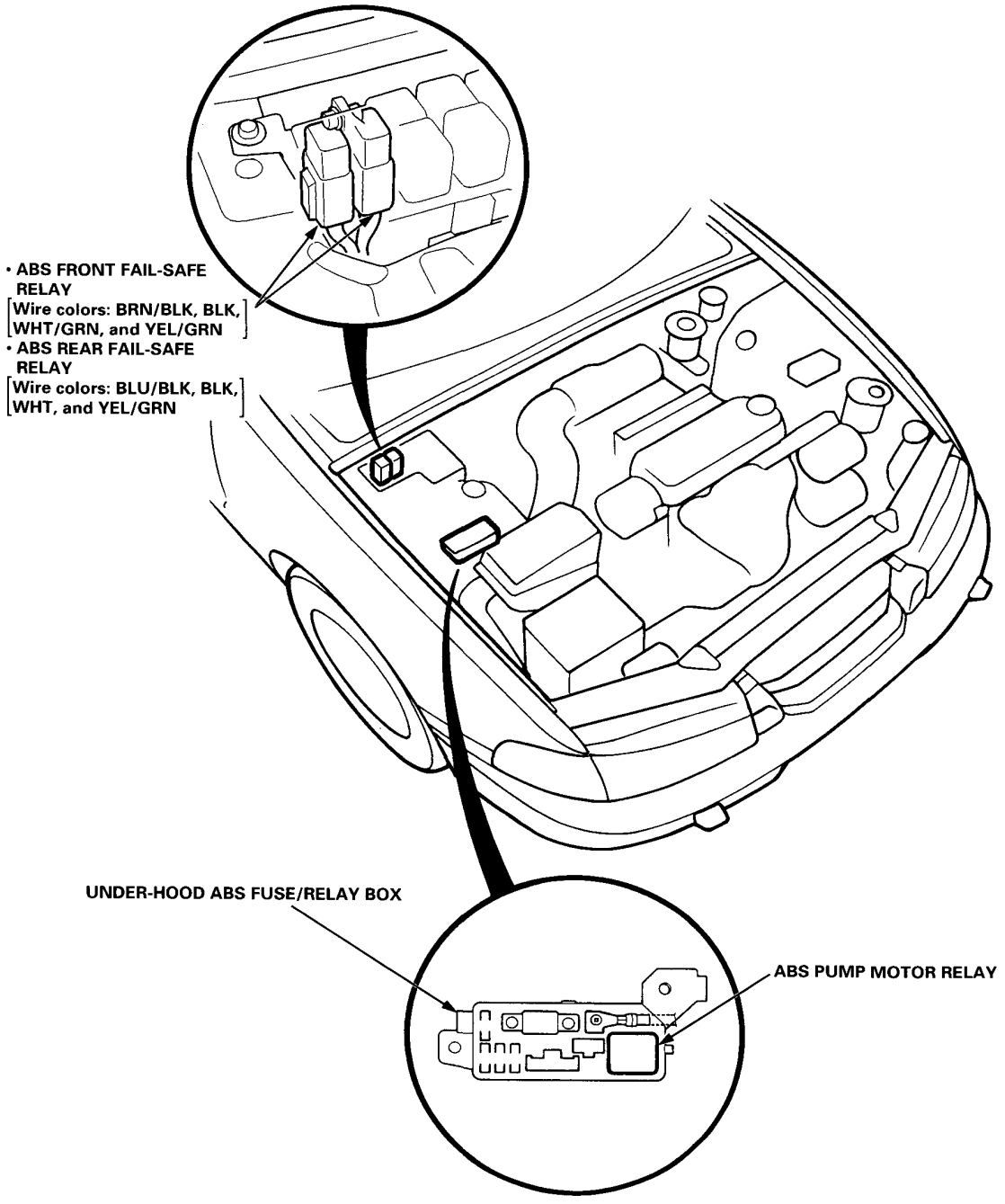

Relay and Control Unit Locations

Dashboard

LHD:

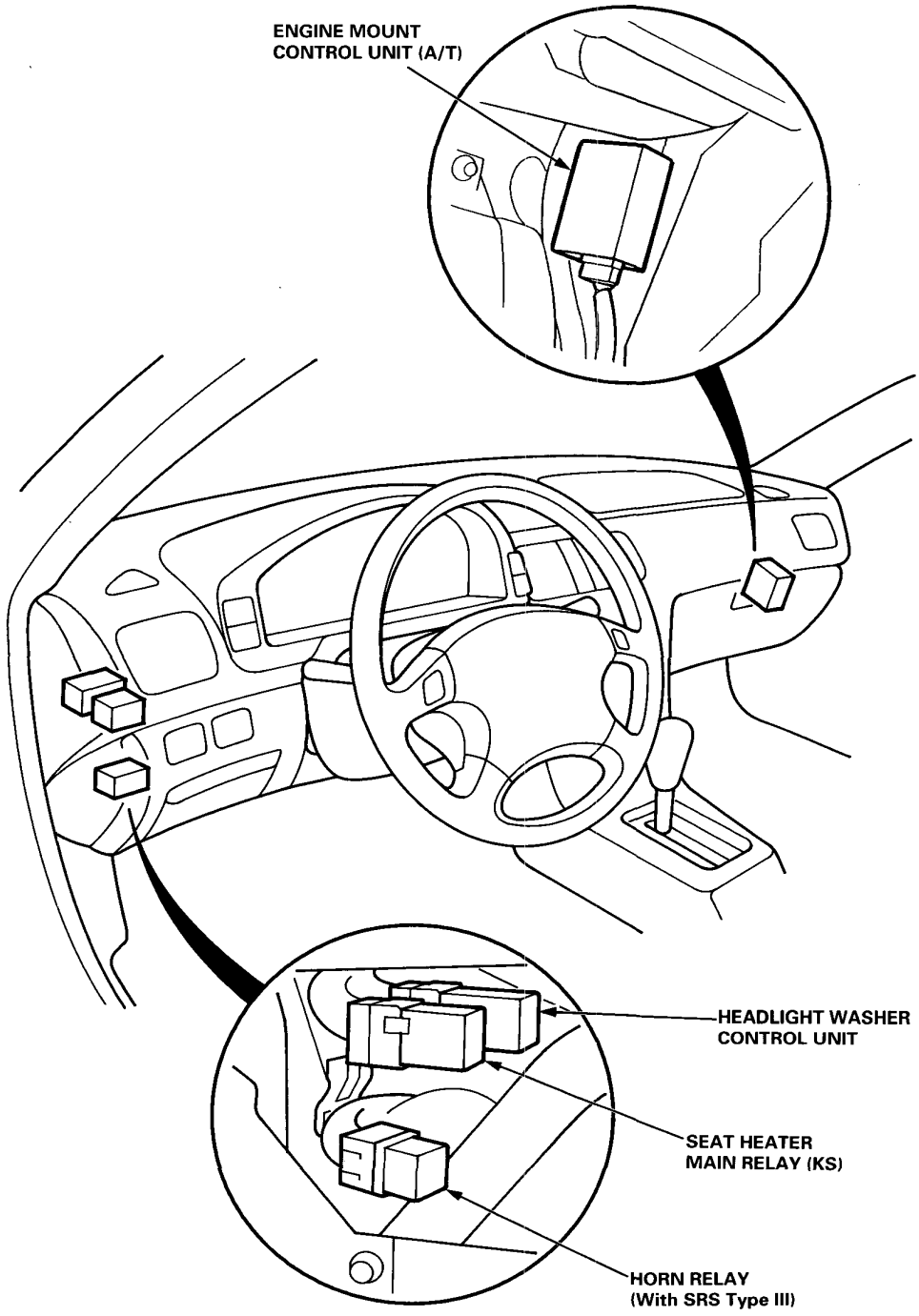

RHD:

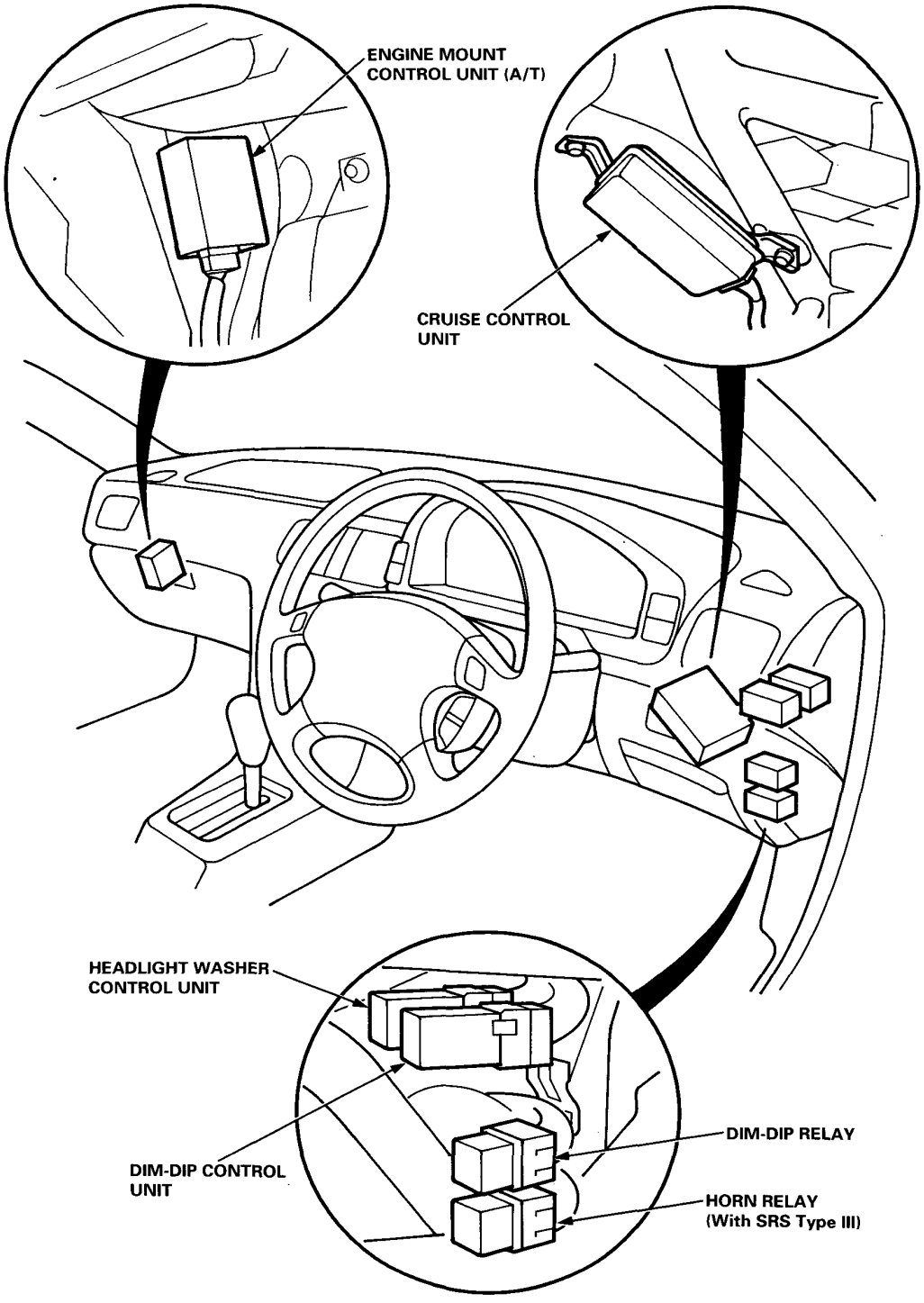
ENGINE MOUNT
CONTROL UNIT (A/T)
CRUISE CONTROL
UNIT
HEADLIGHT WASHER
CONTROL UNIT
DIM-DIP CONTROL
UNIT
DIM-DIP RELAY
HORN RELAY
(With SRS Type III)

Relay and Control Unit Locations

Floor

NOTE: RHD type is shown, LHD type is similar.

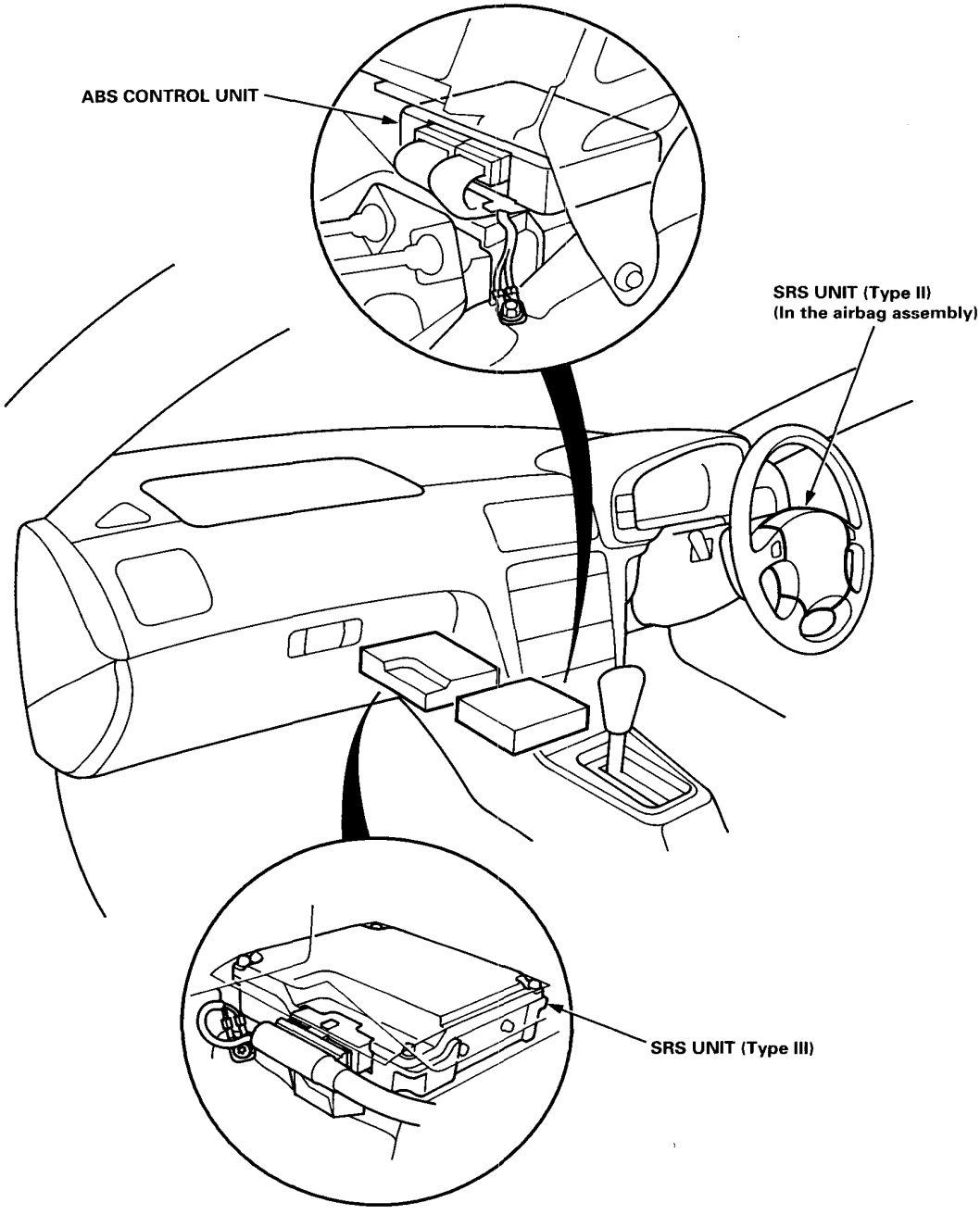

Wire Harness and Ground Locations

Engine Compartment (RHD)

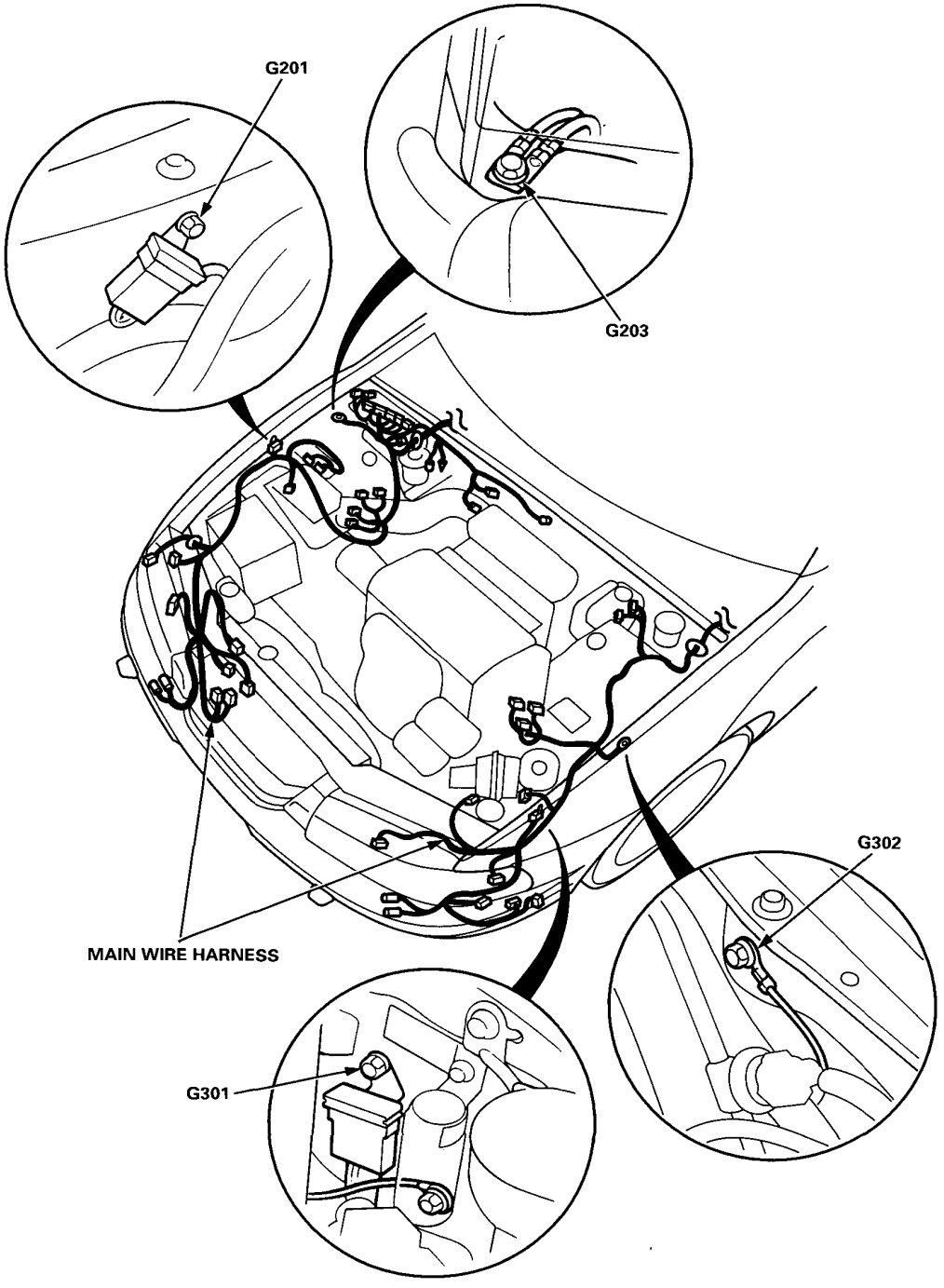

Wire Harness and Ground Locations

Floor

NOTE: LHD type is shown, RHD type is symmetrical.

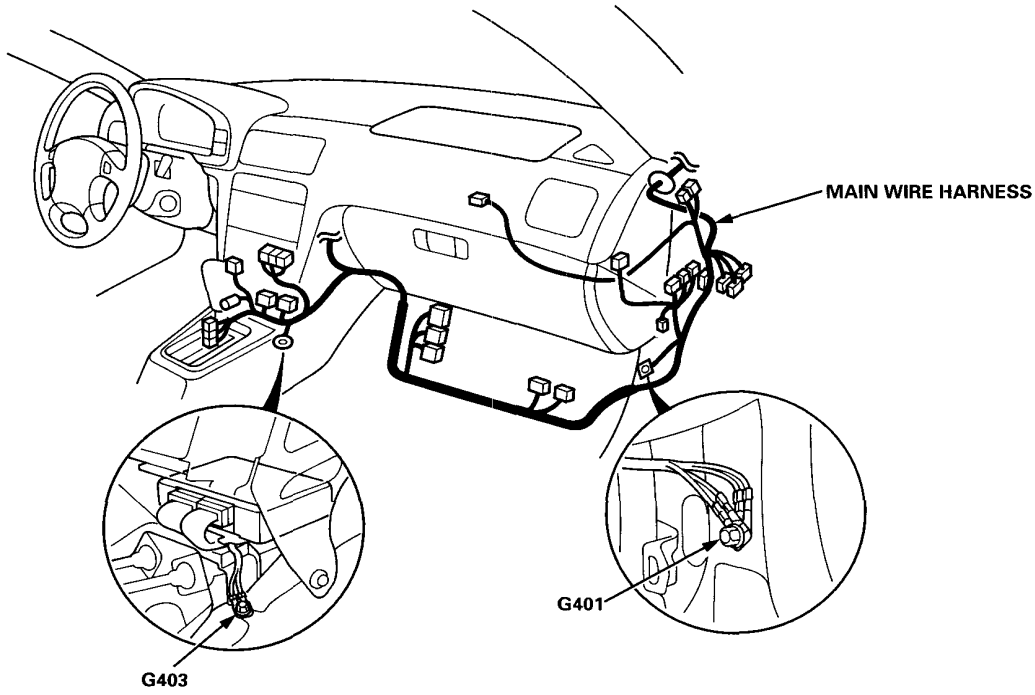

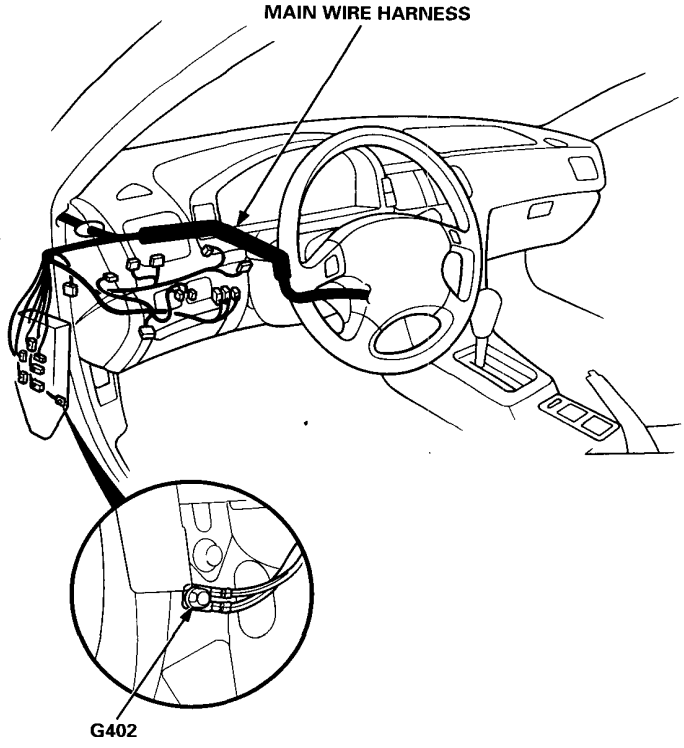

Under-hood ABS Fuse/Relay Box

NOTE: The ABS fuse/relay box is on the right side of the engine compartment.

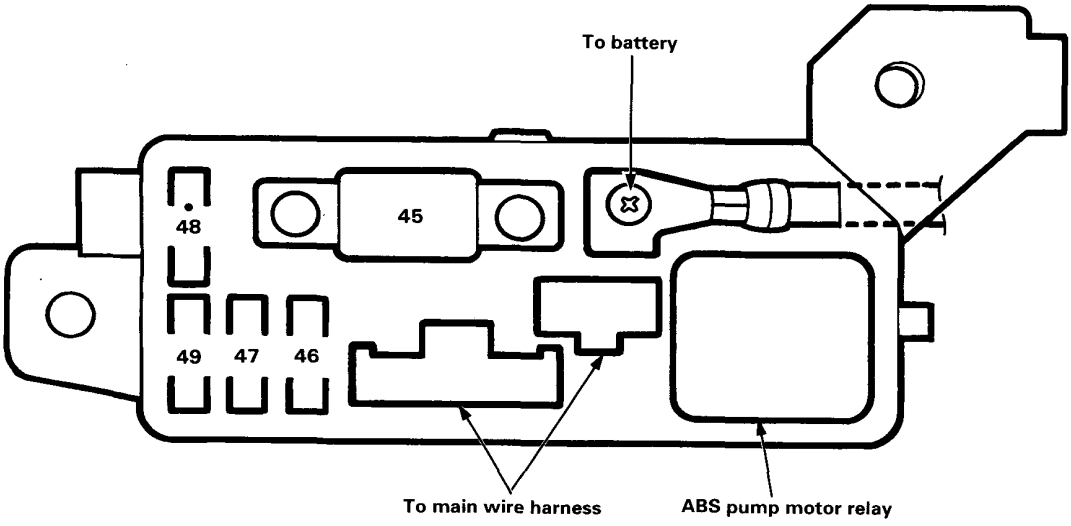

•: Not used

Fuse Number	Amps	Wire Color	Circuit(s) and Component(s) Protected
45	40 A	———	ABS pump motor relay (contacts)
46	20 A	WHT/GRN	ABS front solenoids
47	15 A	WHT	ABS control unit (+B2), ABS rear solenoid
48	———	———	Not used
49	7.5 A	WHT/BLU	ABS control unit (MCK)

Under-hood Fuse/Relay Box

NOTE: The fuse/relay box is on the right side of the engine compartment.

Front View:

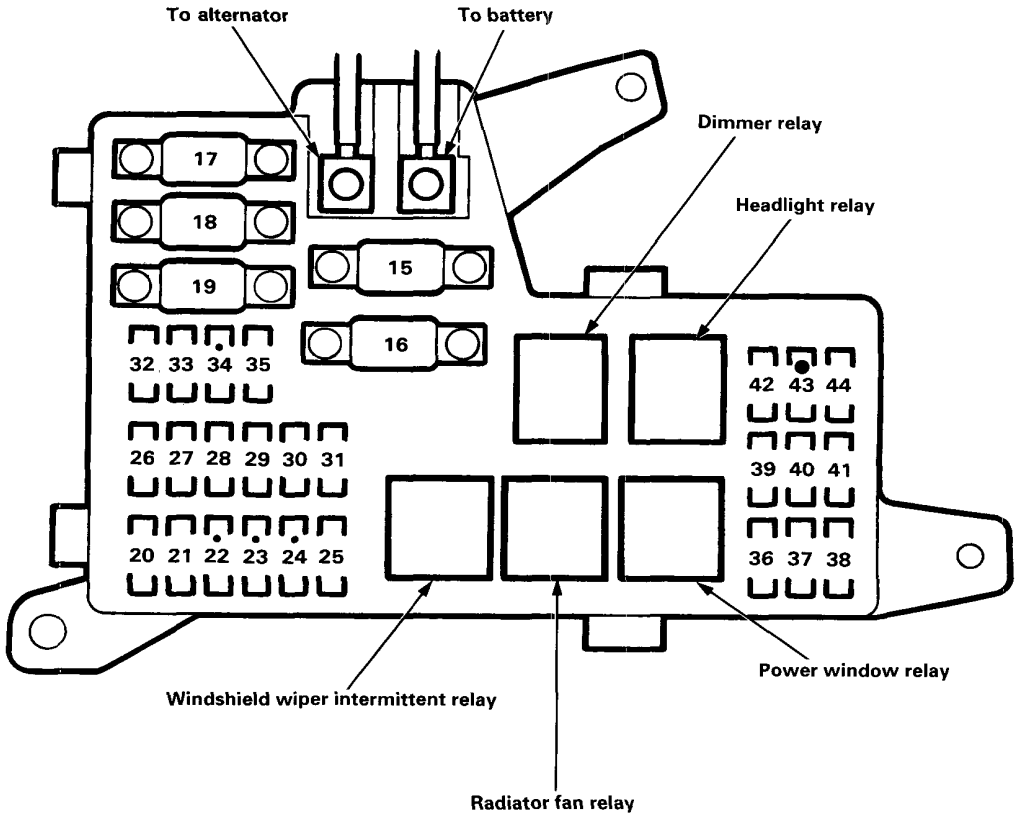

•: Not used
●: KE

Back View:

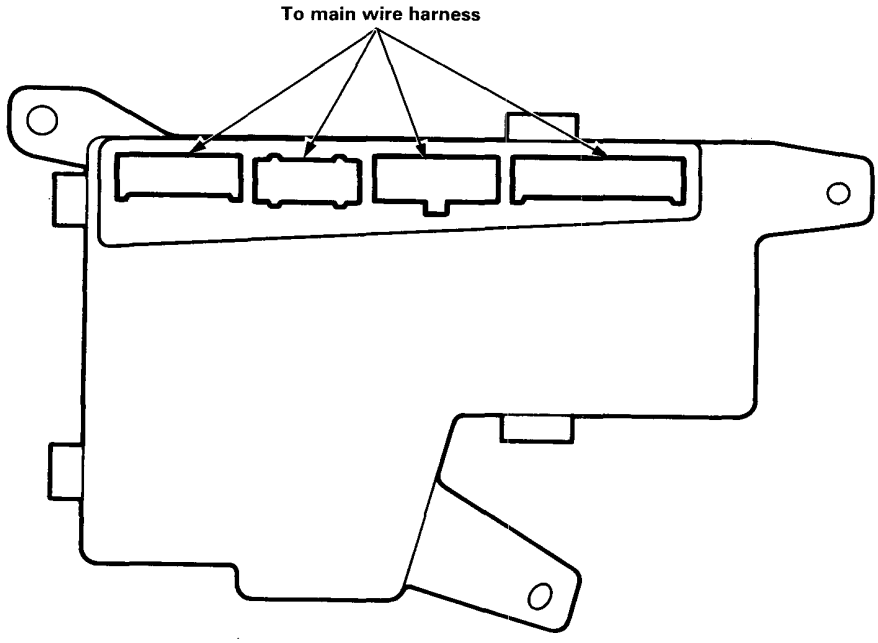

Fuse Number	Amps	Wire Color	Circuit(s) and Component(s) Protected
15	80 A	———	Main fuse (battery), power distribution
16	50 A	WHT	Main fuse (ignition switch)
17	40 A	BLK/GRN	Main fuse (rear window defogger relay)
18	30 A	WHT	Main fuse (blower motor relay)
19	30 A	RED/GRN	Main fuse (dash lights, parking lights [small lights]), via No. 13 (10 A) fuse in the auxiliary fuse holder (KE, KS)
20	10 A	BLU/YEL (KE)	Dim-dip relay, dim-dip headlight control unit
	———	WHT	Front fog light (option on KG and KS)
21	20 A	WHT/BLU	Power door lock control unit, keyless entry and security alarm system, immobilizer unit (KG)
22	———	———	Not used
23	———	———	Not used
24	———	———	Not used
25	20 A	———	Radiator fan relay
26	30 A	GRN	Sunroof
27	10 A	BLU/RED	Lighting system
28	30 A	WHT/BLK	Headlight washer control unit
29	15 A	WHT/BLU	Ceiling (interior) lights, cigarette lighter, trunk light, * data link connector
30	15 A	WHT	Condenser fan motor, radiator fan control module
31	10 A	YEL/BLU	PGM-FI main relay (+B)
32	20 A	WHT/RED	Power seat up-down motor (power seat height)
33	15 A	WHT/BLK (KS)	Seat heater
	———	WHT	Front fog light (KE-option)
34	———	———	Not used
35	7.5 A	WHT/YEL	Clock (+B), engine control module (ECM), transmission control module (TCM), stereo sound system
36	20 A	GRN/BLK	Left rear power window, key-off operation system
37	20 A	YEL/BLK	Right rear power window, key-off operation system
38	20 A	WHT/YEL	Left front power window, key-off operation system
		BLU/BLK (KE)	
39	20 A	BLU/BLK	Right front power window, key-off operation system
		WHT/YEL (KE)	
40	20 A	RED/GRN	Right headlight, high beam indicator
41	20 A	WHT/YEL	Horns, brake lights, brake light signal, security horn
42	20 A	RED/YEL	Left headlight
43	10 A	RED/GRN (KE)	Dim-dip resistor
44	10 A	WHT/GRN	Hazard warning lights

*: With SRS Type III

Under-dash Fuse/Relay Box

Front View:

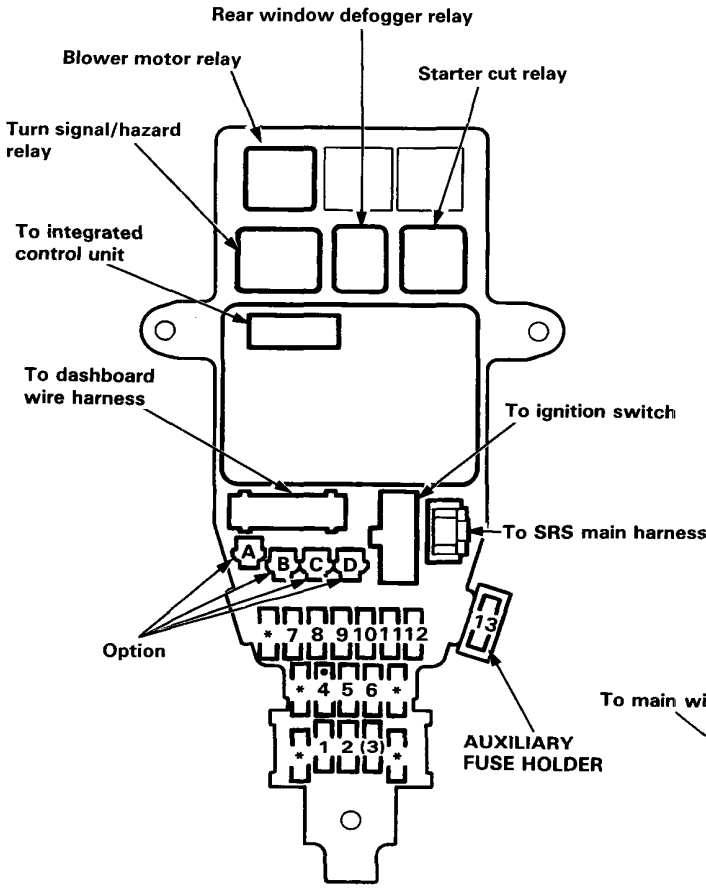

Back View:

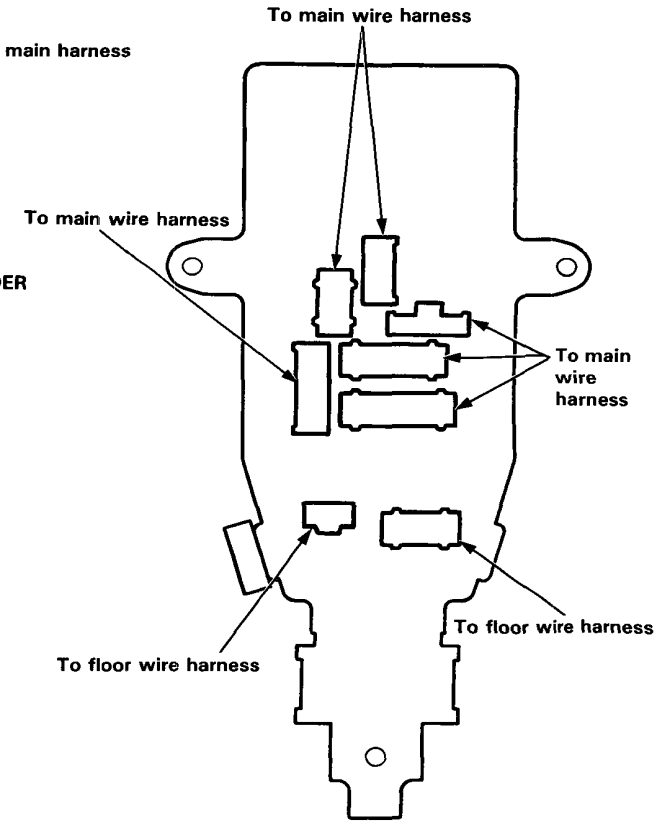

* : Spare fuse
( ): With SRS
● : KE with cruise control

Fuse Number	Amps	Wire Color	Circuit(s) and Component(s) Protected
1	7.5 A	YEL/WHT	Keyless entry and security alarm system
2	15 A	BLK/YEL	Transmission control module (TCM), spider unit (KE), PGM-FI main relay (Via inertia switch)
		PNK	SRS unit
3	10 A	RED	SRS unit
4	7.5 A	BLK/RED (KE)	Cruise control unit
5	7.5 A	YEL/GRN	Headlight adjuster (KG, KS), power mirrors, key-off operation system, sunroof
6	30 A	GRN/BLK	Wiper/washer system
7	7.5 A	YEL/BLK	ABS control unit, heater control panel, radiator fan relay, radiator fan control module, rear window defogger relay
8	10 A	YEL	Back-up lights, clock, warning/indicator lights
9	7.5 A	BLK/YEL	A/C compressor clutch relay
10	7.5 A	YEL/RED (KE)	Dim-dip headlights
		RED/YEL (KG)	Left taillights
		YEL/RED (KS)	Daytime running lights control unit
11	10 A	YEL/RED	Stereo sound system (radio motor antenna)
12	7.5 A	BLU/RED	Engine control module (ECM), PGM-FI main relay
13	10 A	RED/GRN (KE)	Combination light switch/lights
		RED/BLK (KG)	Dash lights, switch lights, parking lights, right taillight
		RED/GRN (KS)	Combination light switch/ lights, daytime running lights control unit

No. 13 fuse: In the auxiliary fuse holder

Power Distribution

Circuit Identification

NOTE: This page corresponds to page 23 – 35 (LHD) and page 23 – 43 (RHD) in Shop Manual (62SN700) and reflects the model changes.

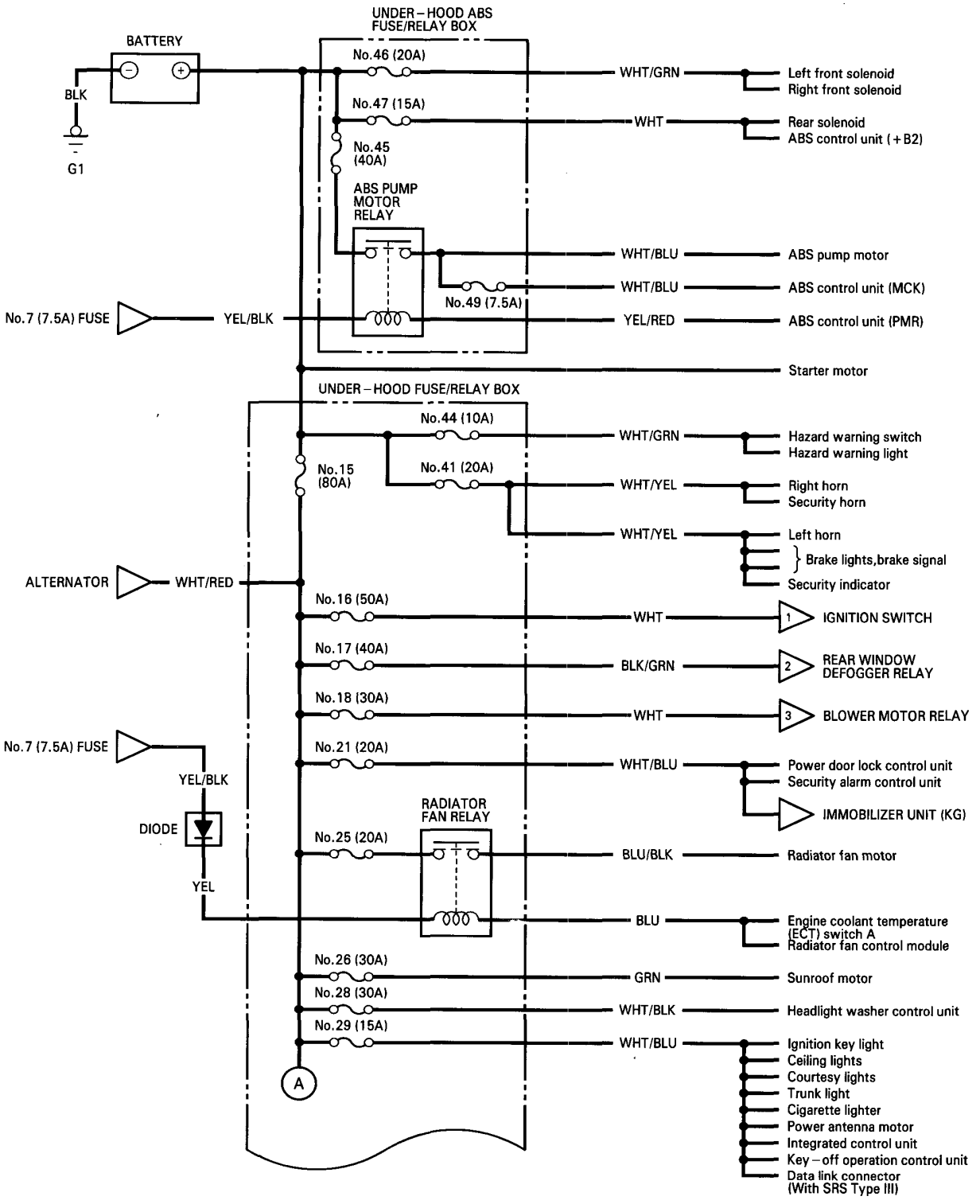

Ground Distribution

Circuit Identification

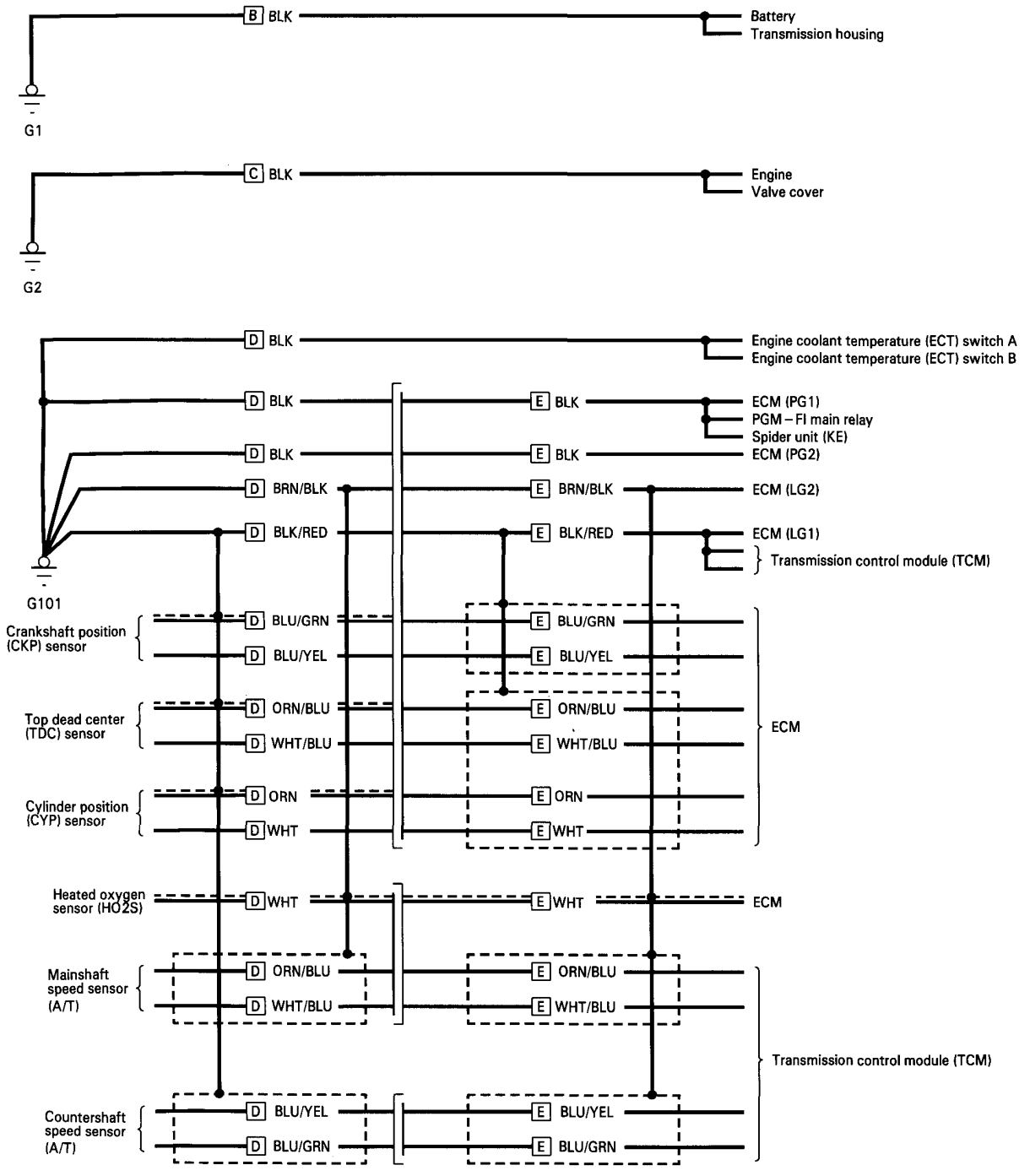

Ground Distribution

Circuit Identification

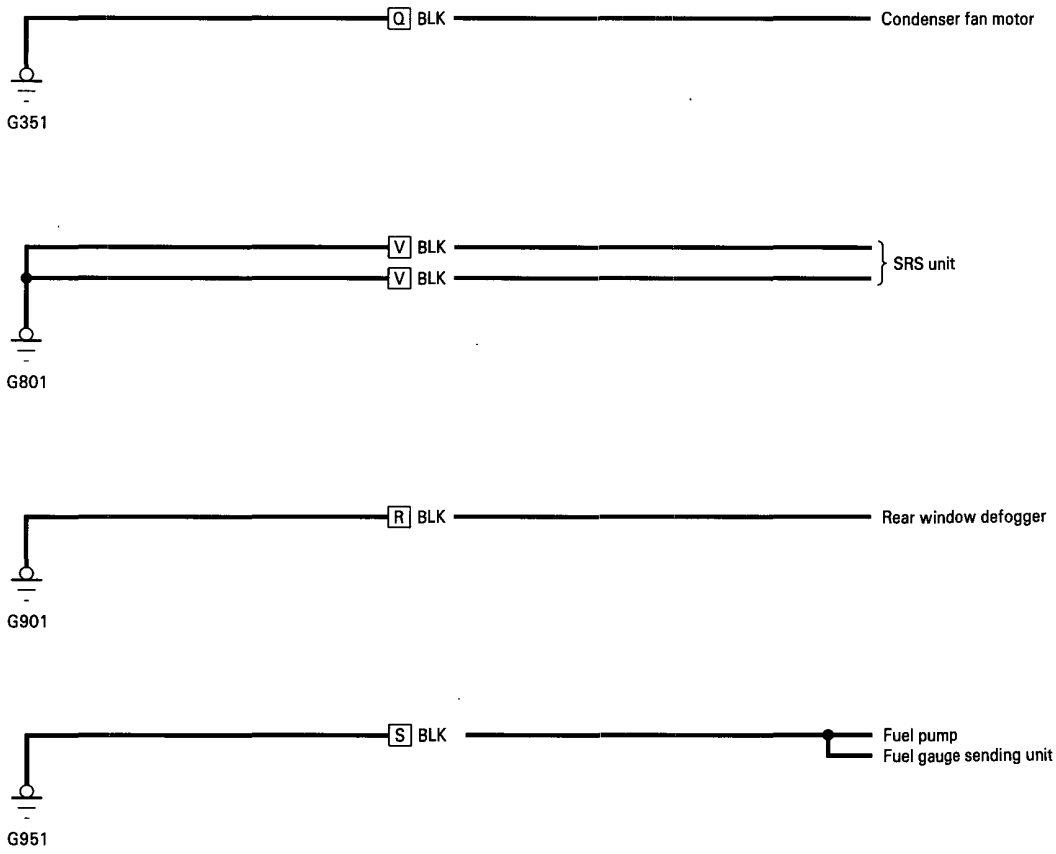

Q : A/C wire harness
R : Rear window defogger ground wire
S : Fuel unit wire harness
V : SRS sub–harness

Circuit Identification (LHD)

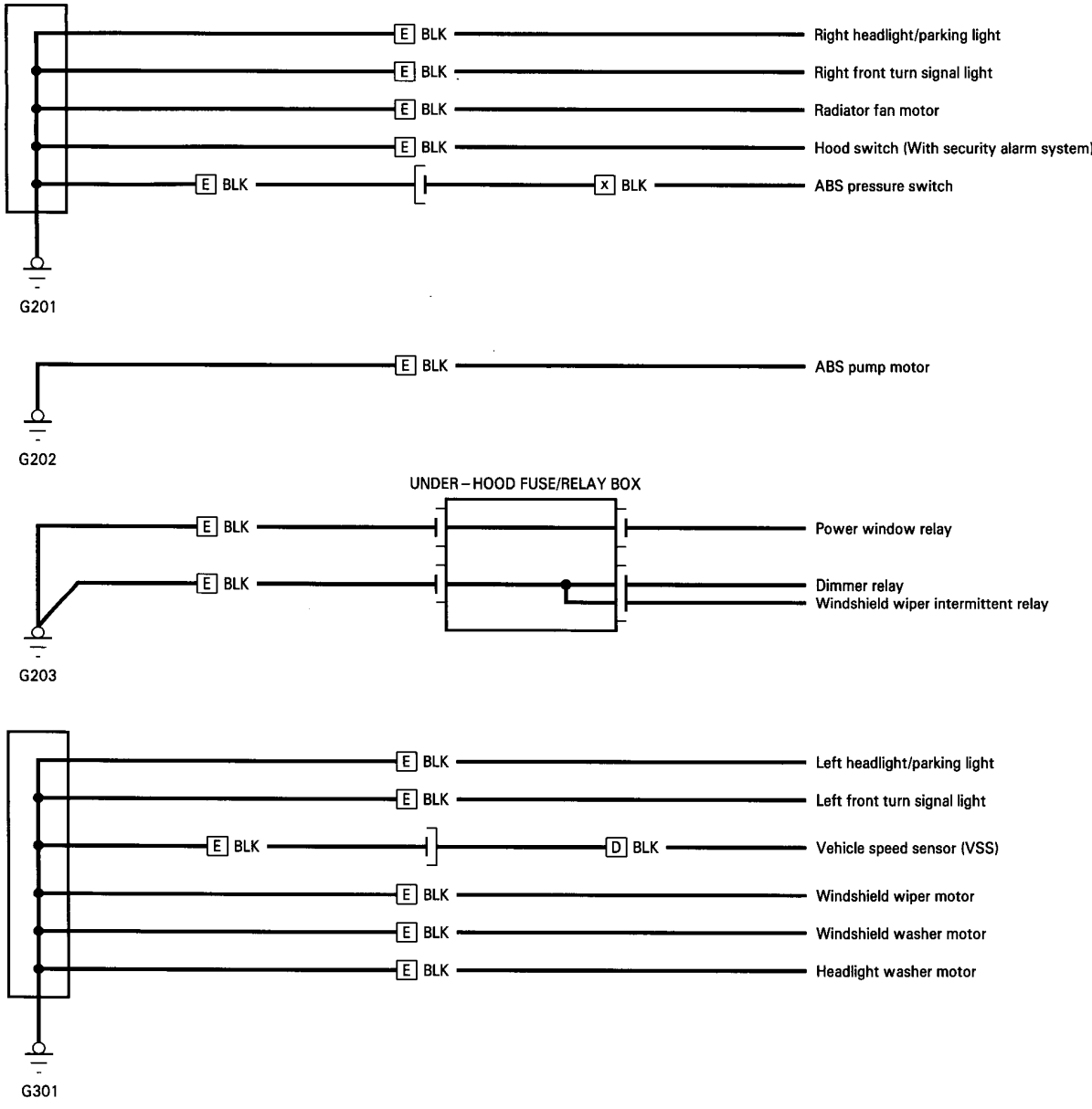

D : Engine wire harness
E : Main wire harness
X : ABS wire harness

Ground Distribution

Circuit Identification (LHD cont'd)

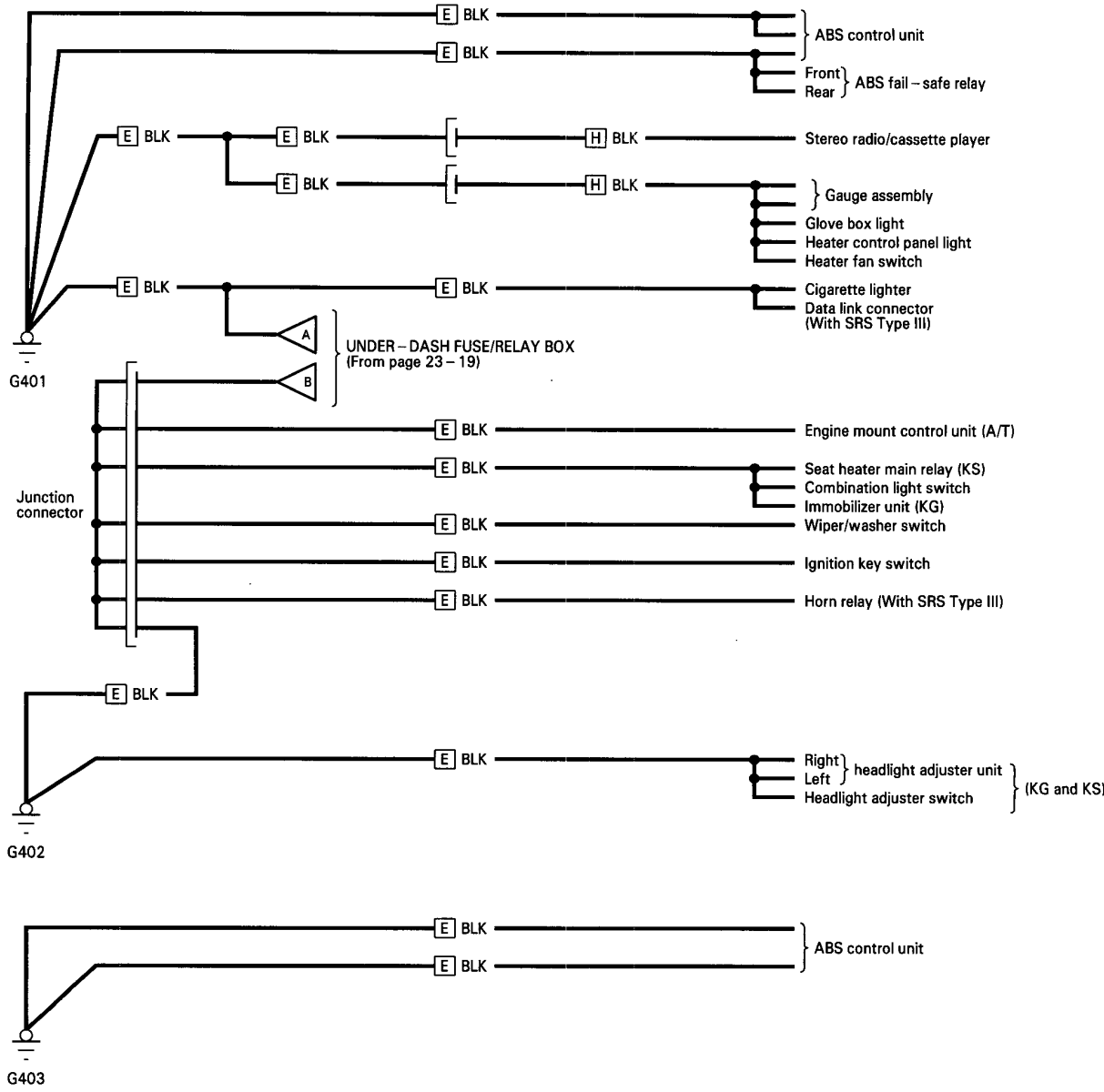

E : Main wire harness

H : Dashboard wire harness

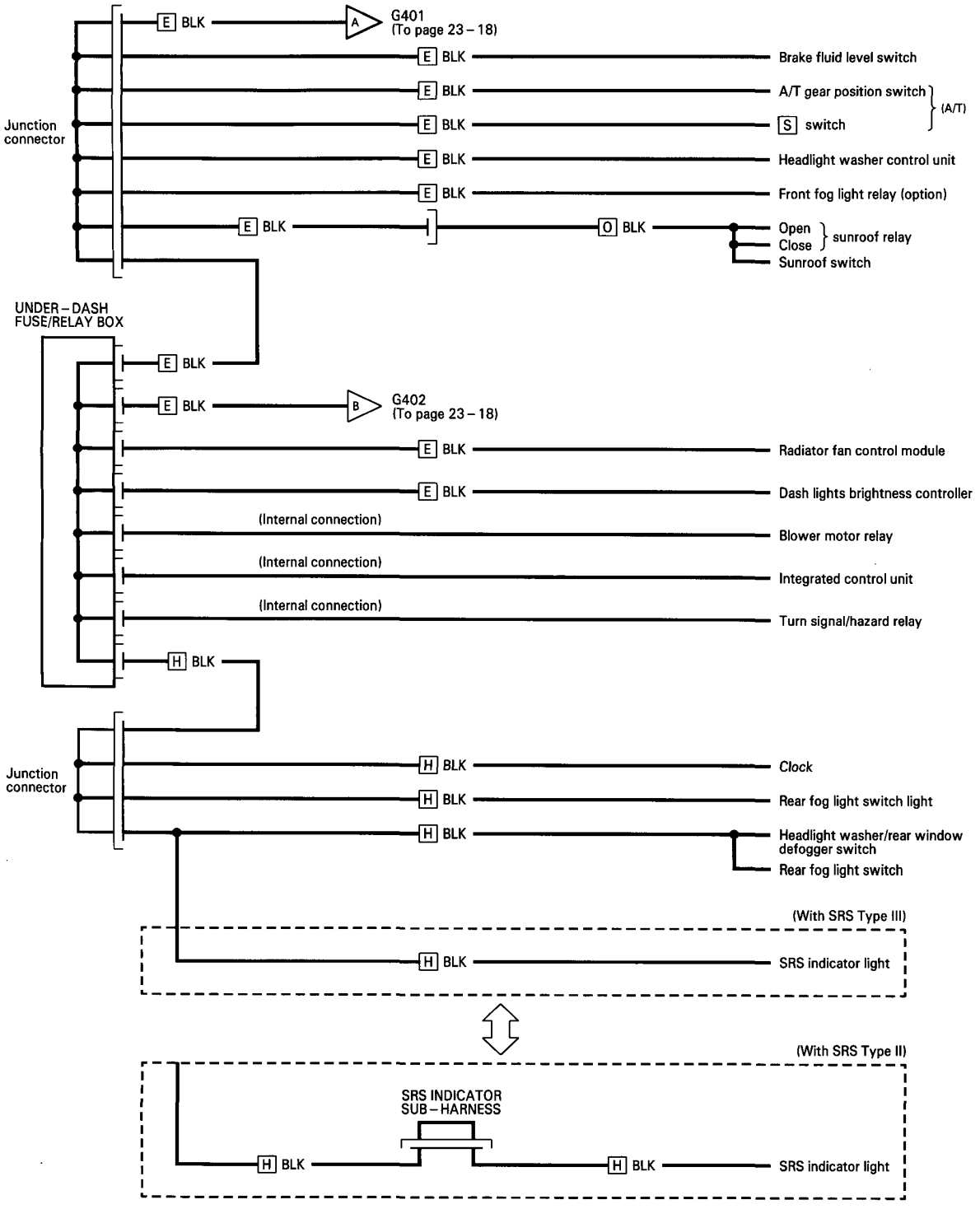

E : Main wire harness
O : Roof wire harness
H : Dashboard wire harness

Ground Distribution

Circuit Identification (LHD cont'd)

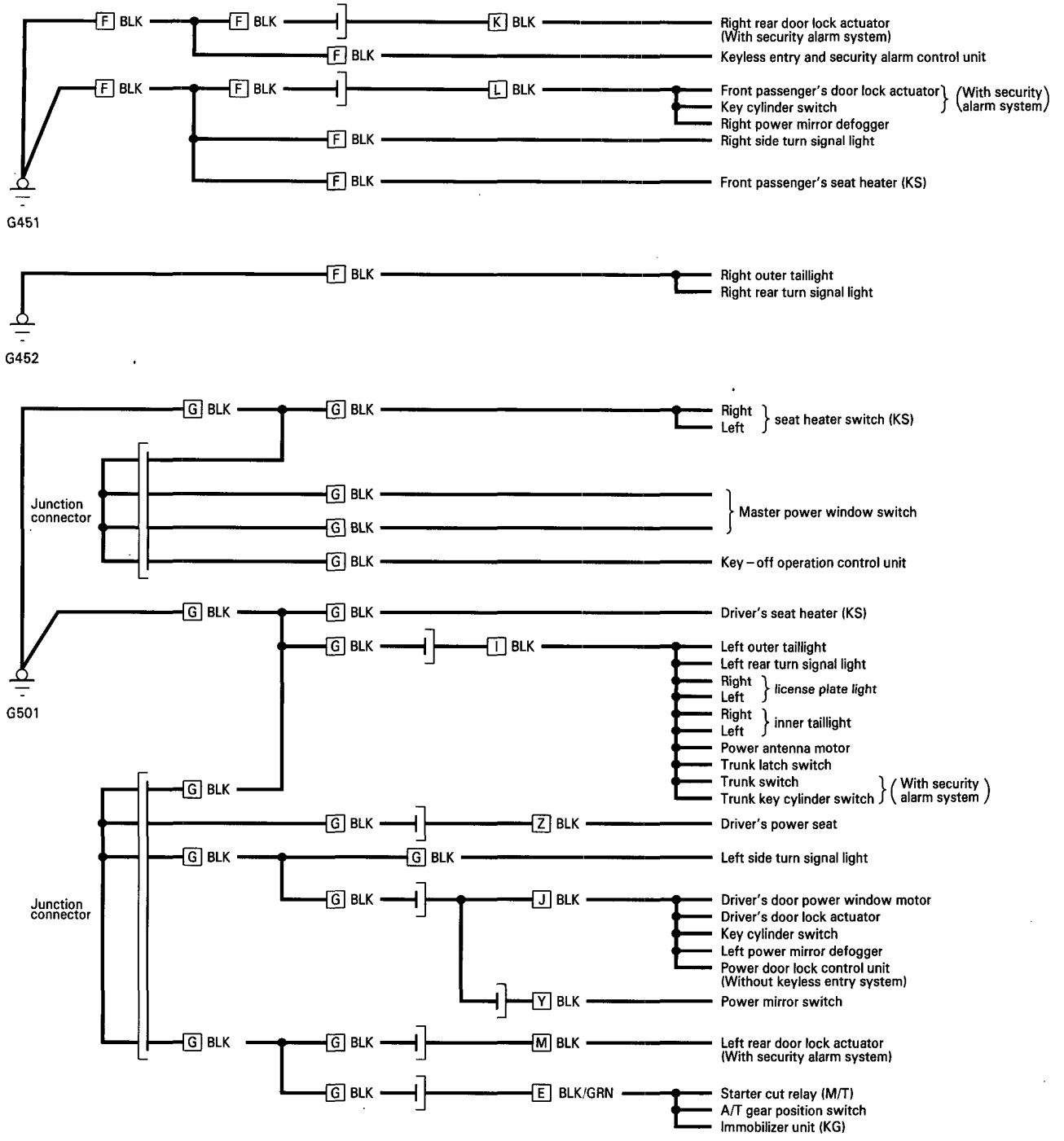

E : Main wire harness
F : Side wire harness
G : Floor wire harness
H : Dashboard wire harness
I : Rear wire harness
J : Driver's door wire harness
K : Right rear door wire harness
L : Front passenger's door wire harness
M : Left rear door wire harness
Y : Power mirror switch sub – harness
Z : Power seat wire harness

Circuit Identification (RHD)

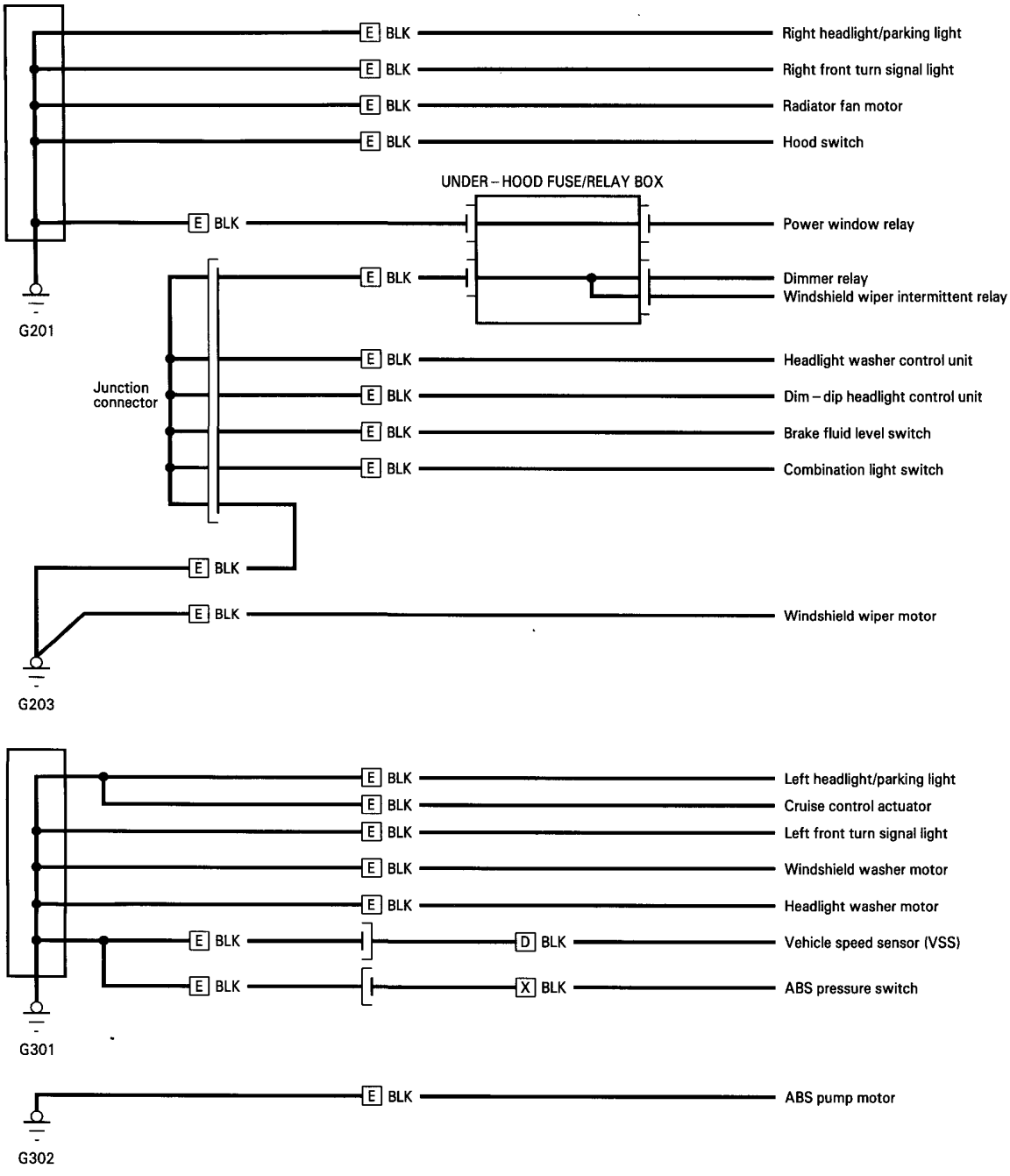

D : Engine wire harness
E : Main wire harness
X : ABS wire harness

Ground Distribution

Circuit Identification (RHD cont'd)

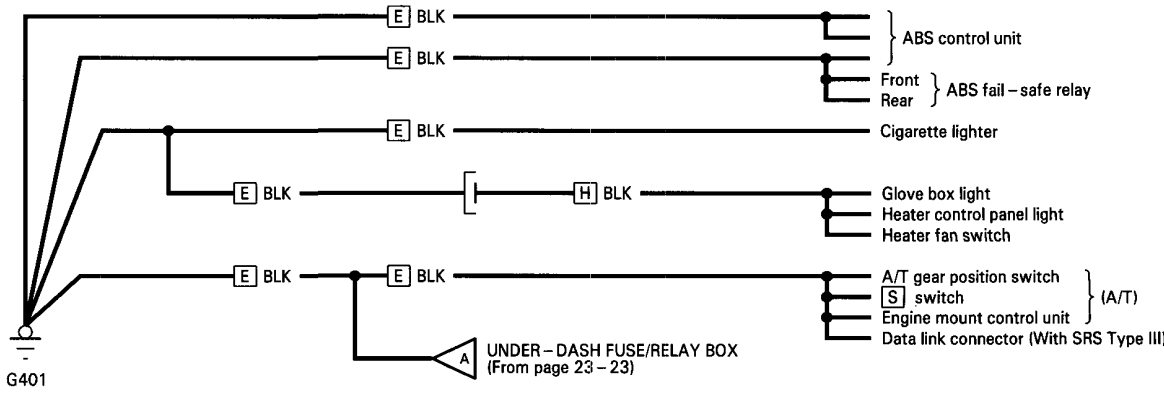

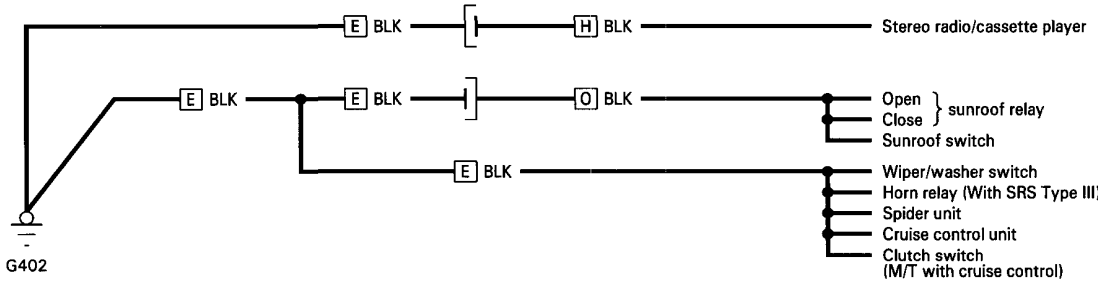

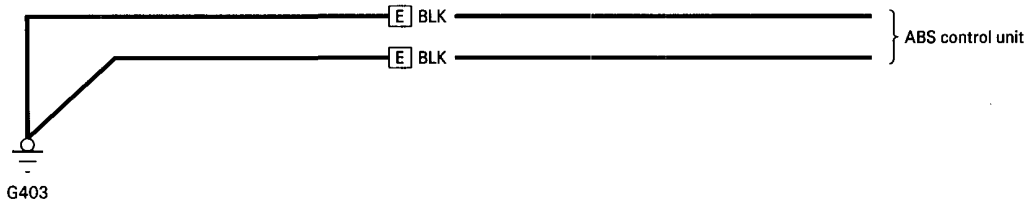

E : Main wire harness
H : Dashboard wire harness
O : Roof wire harness

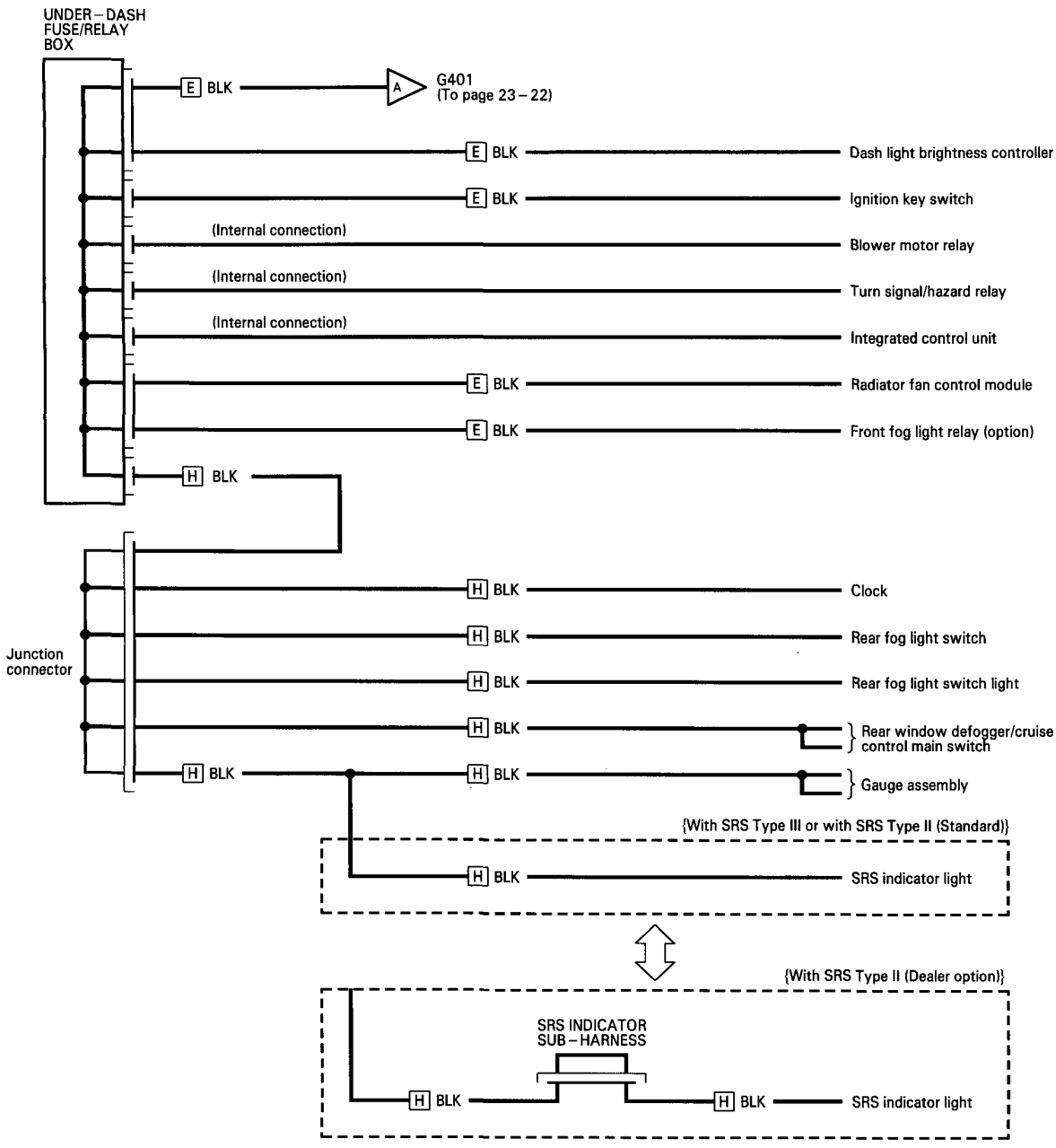

E : Main wire harness

H : Dashboard wire harness

Ground Distribution

Circuit Identification (RHD cont'd)

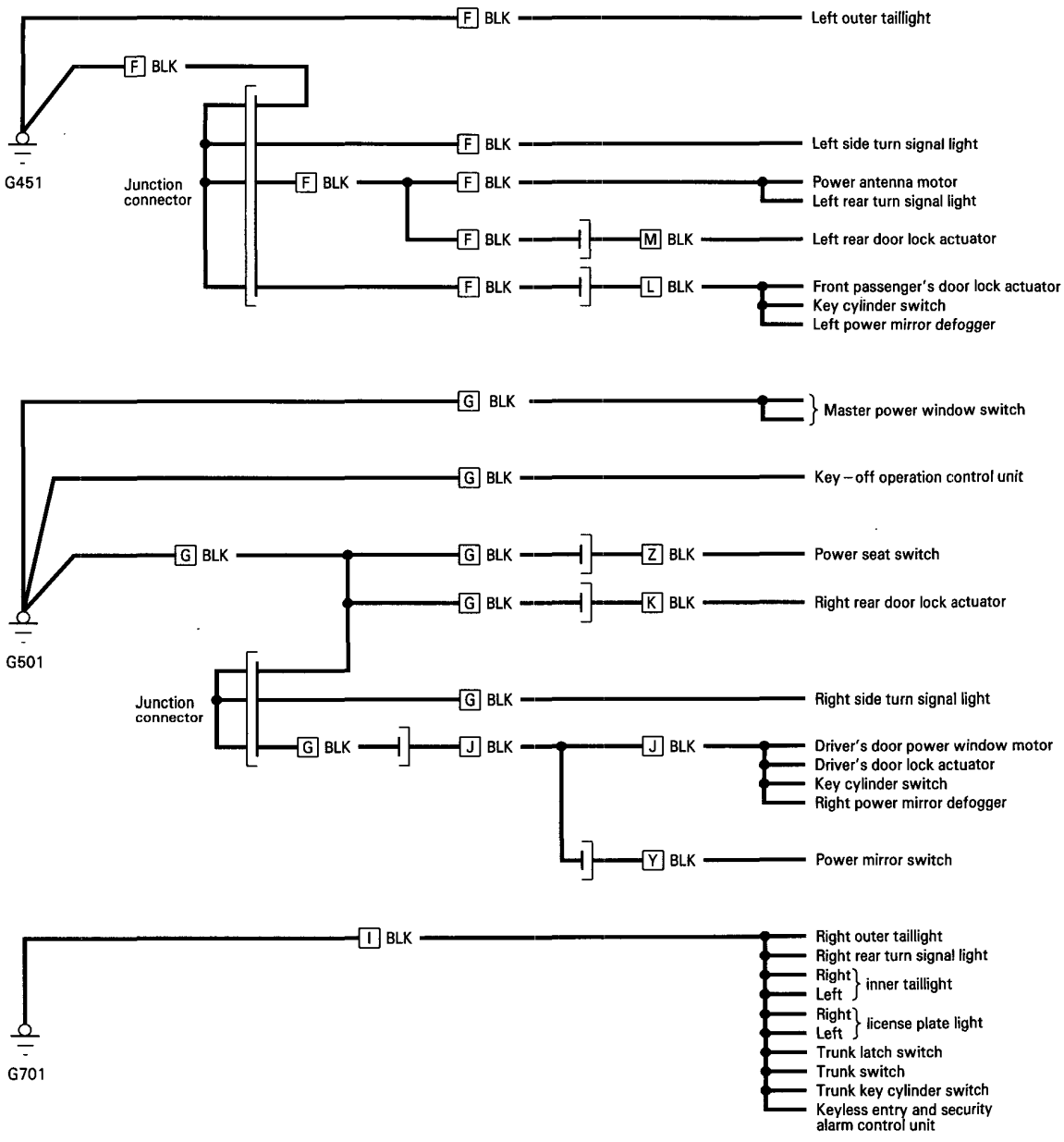

E : Main wire harness
F : Side wire harness
G : Floor wire harness
I : Rear wire harness
J : Driver's door wire harness
K : Right rear door wire harness
L : Front passenger's door wire harness
M : Left rear door wire harness
Y : Power mirror switch sub – harness
Z : Power seat wire harness

Gauge Assembly

Terminal Locations

CAUTION:

- All SRS wire harnesses are covered with yellow insulation.
- Replace the entire affected SRS harness assembly if it has an open circuit or damaged wiring.
- Before disconnecting the SRS wire harness, turn the ignition switch OFF, disconnect the battery negative cable, then disconnect the positive cable, and wait at least three minutes.
- Whenever the ignition switch is ON (II), or has been turned OFF for less than three minutes, be careful not to bump the SRS unit; the airbags could accidentally deploy and cause damage or injuries.
- Before you disconnect any part of an SRS wire harness, connect the short connectors (RED) to the airbags (SRS Type III).
- Refer to additional precautions beginning on page 23-71 in the SRS sub-section.

SRS Type II:

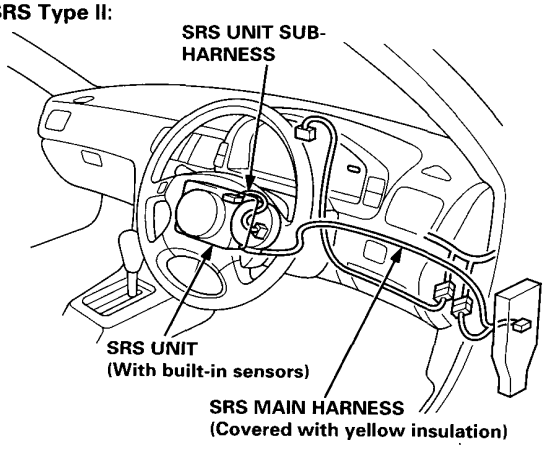

SRS Type III:

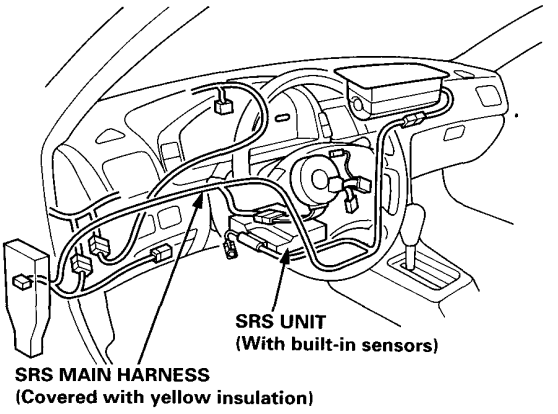

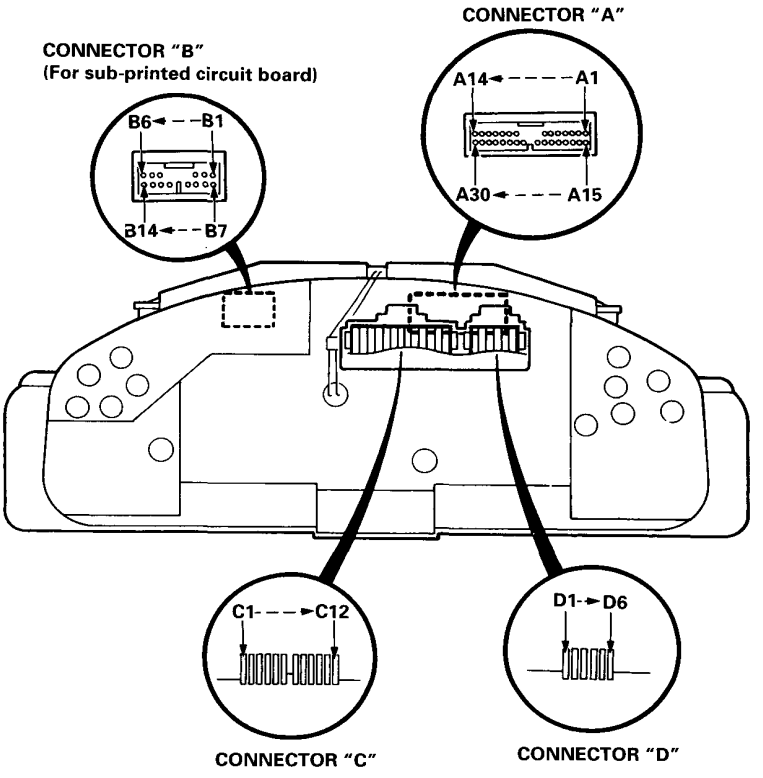

Gauge Assembly

Circuit Diagram

NOTE: Only the sub-printed circuit board is shown below. For the main printed circuit board and the printed circuit film, refer to from page 23 – 118 to 120 of Shop Manual (62SN700).

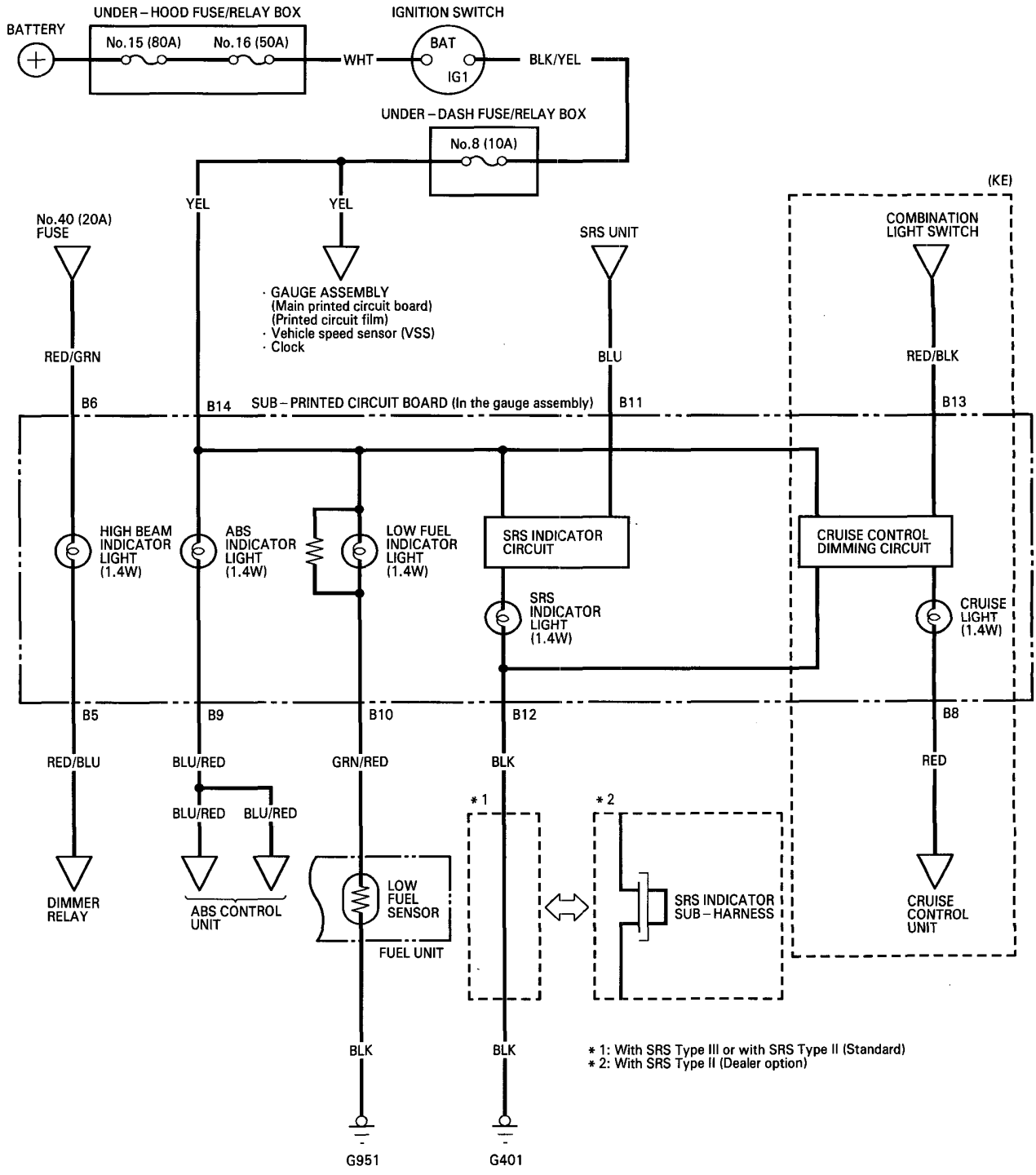

* 1: With SRS Type III or with SRS Type II (Standard)
* 2: With SRS Type II (Dealer option)

Bulb Locations

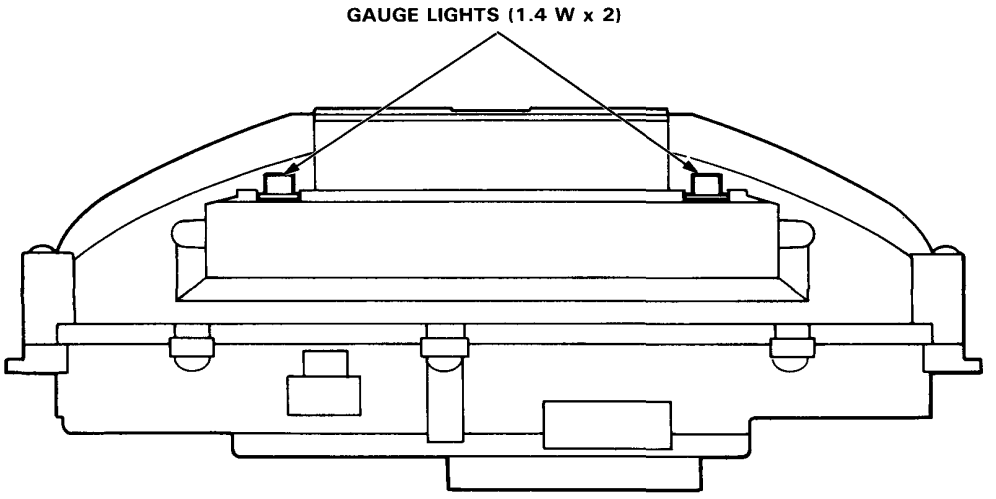

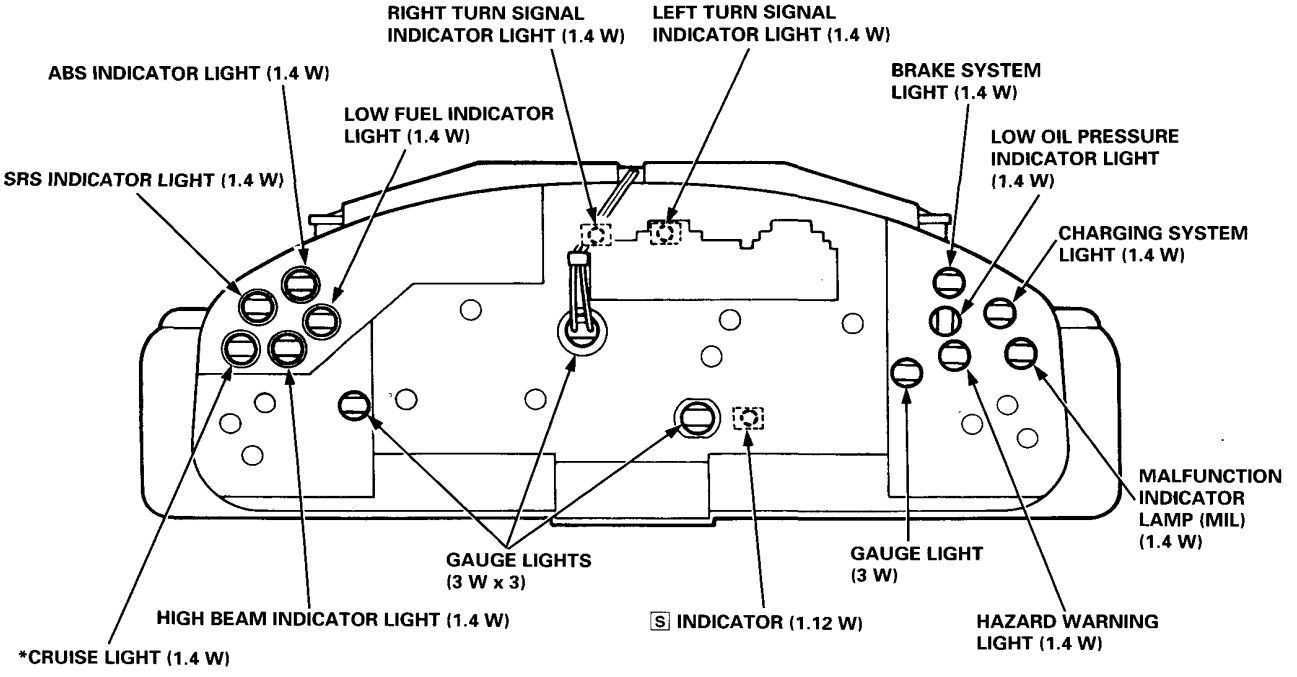

*: KE model

A/T Gear Position Indicator

Circuit Diagram

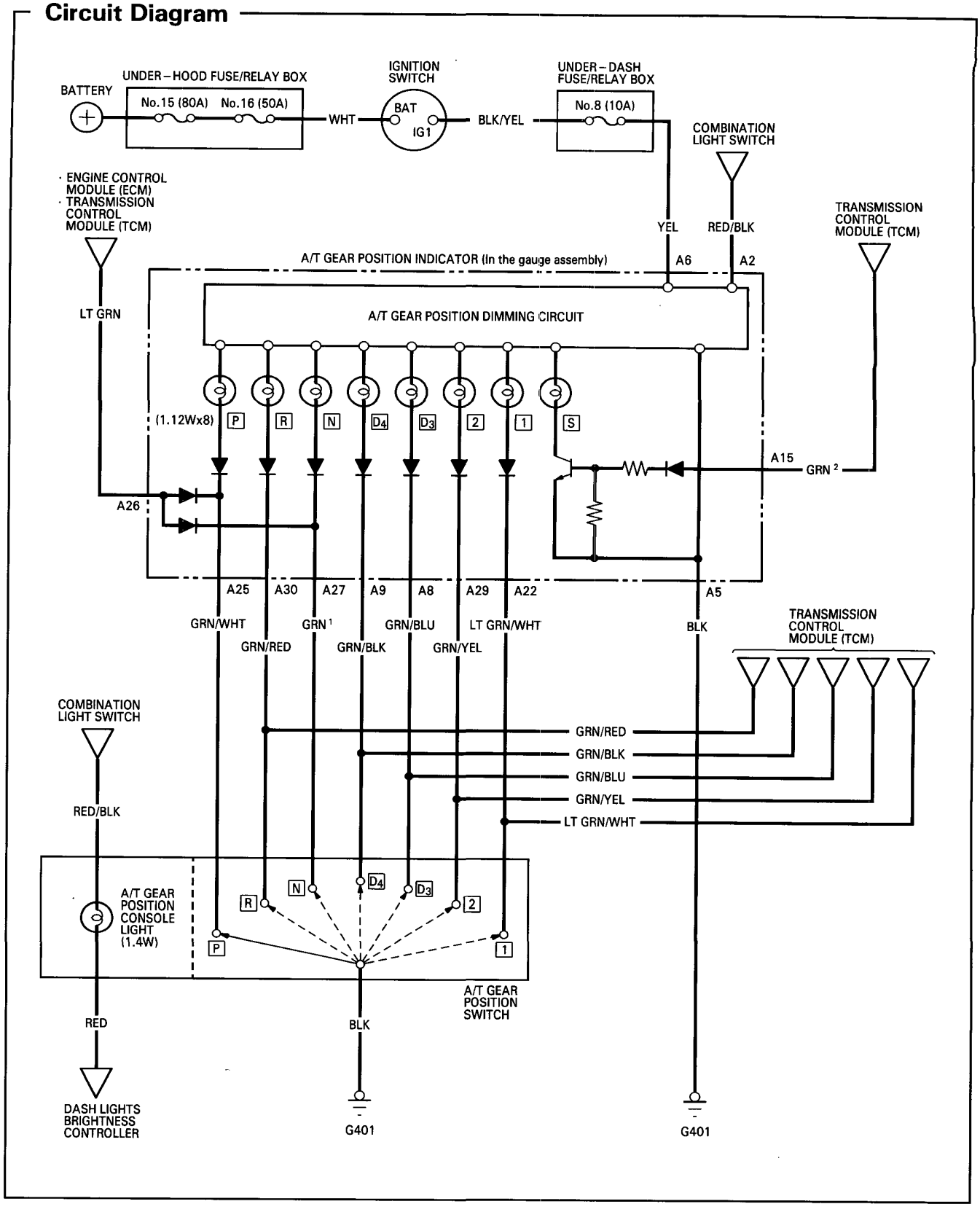

Trunk Light

Trunk Light Test/Replacement

NOTE: The bulb alone can be replaced without removing the trunk light housing.

1. Pry out the trunk light.
2. Disconnect the 2-P connector from the light.

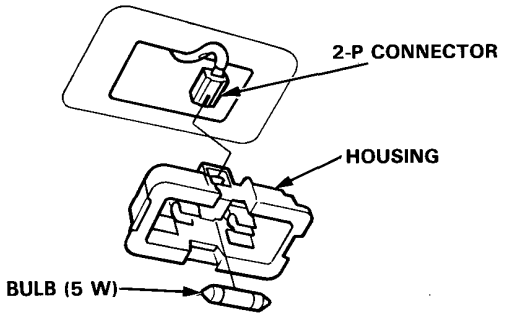

3. Make sure that the bulb is OK, then check for continuity between A (+) and B (–) terminals.

   NOTE: This light has a diode in it. To get an accurate reading, either test it with a voltohmmeter that compensates for diode, or make sure you connect your test leads to match the polarity shown.

4. If there is no continuity, replace the trunk light.

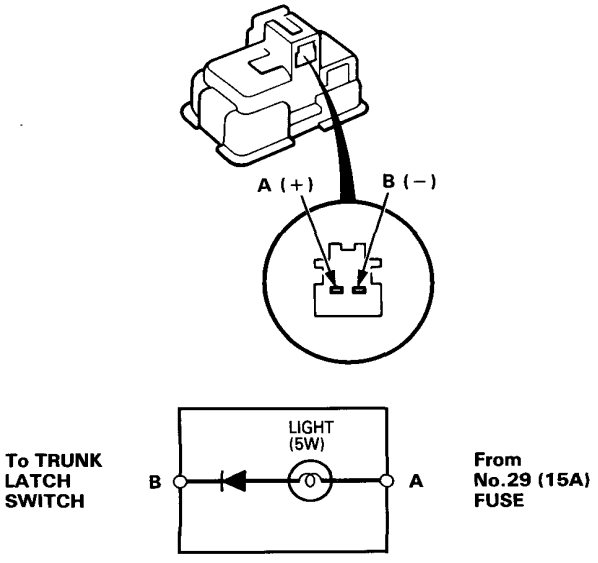

Wiper/Washers

Headlight Washer Switch Test/ Replacement (KE)

1. Pry the switch out of the center console.
2. Disconnect the 4-P connector from the switch.

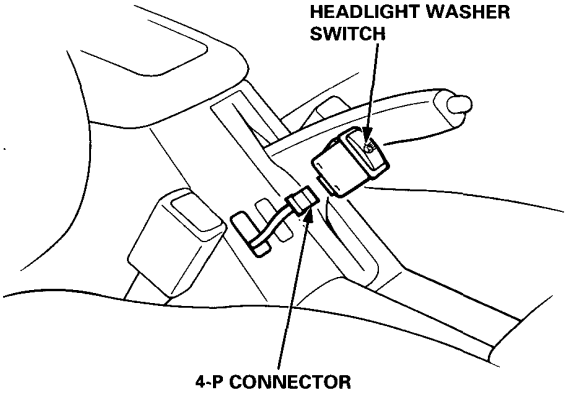

3. Check for continuity between the terminals in each switch position according to the table.

Position \ Terminal	A		B	C	D
OFF	○	⊖		○	
ON	○	⊖	○	○	○

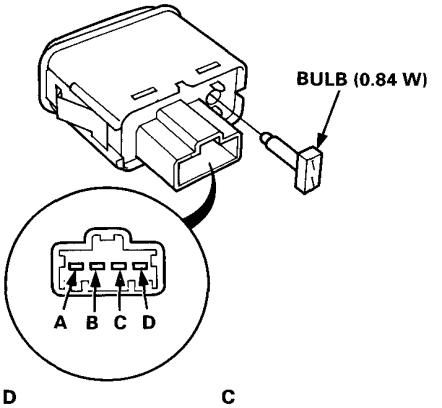

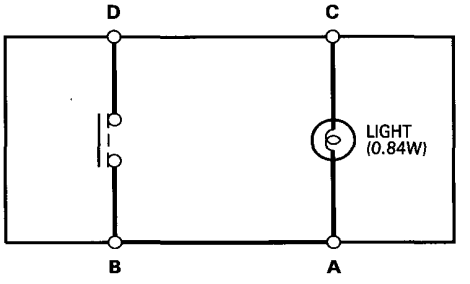

Circuit Diagram (With SRS Type III)

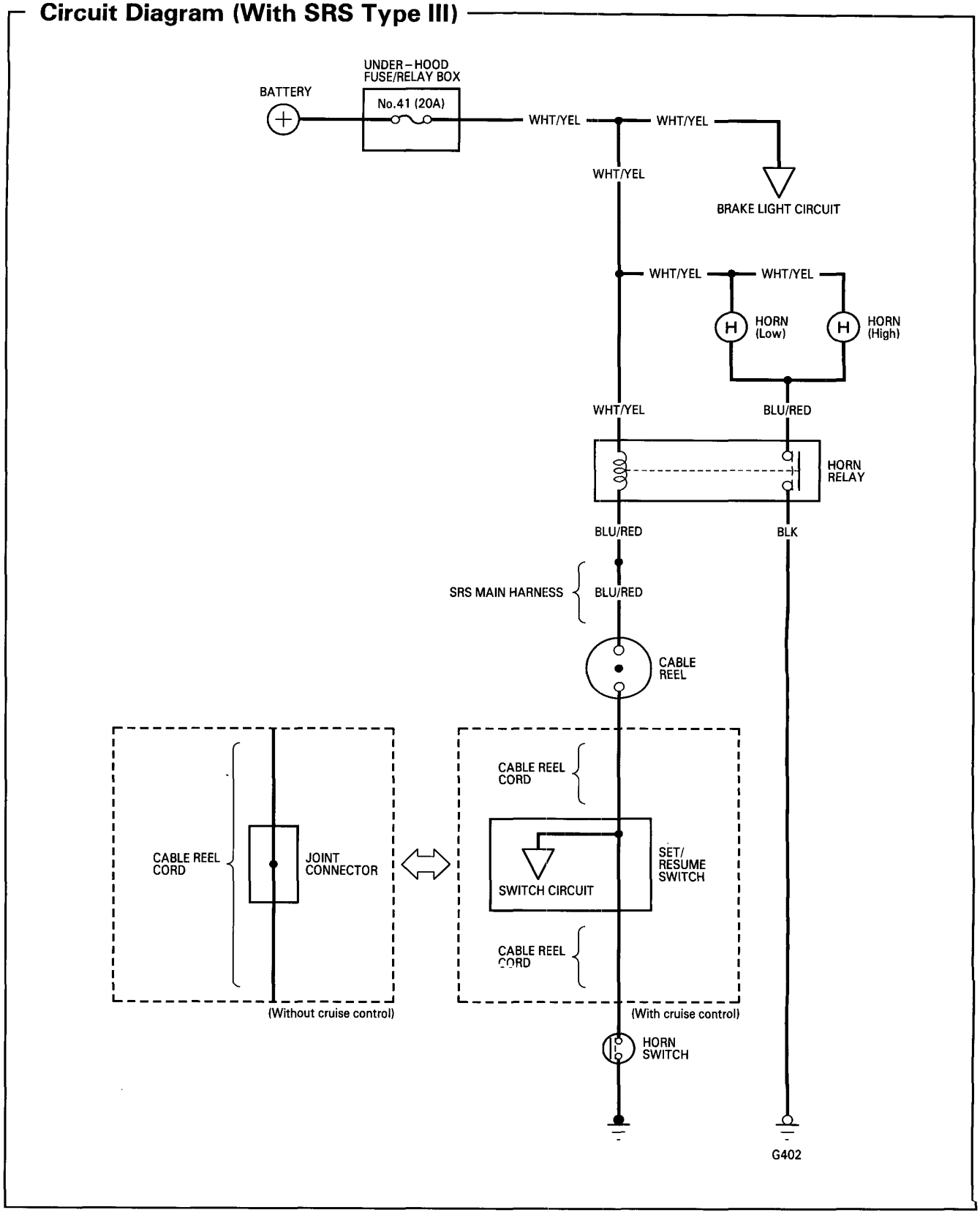

Circuit Diagram (Without SRS Type III)

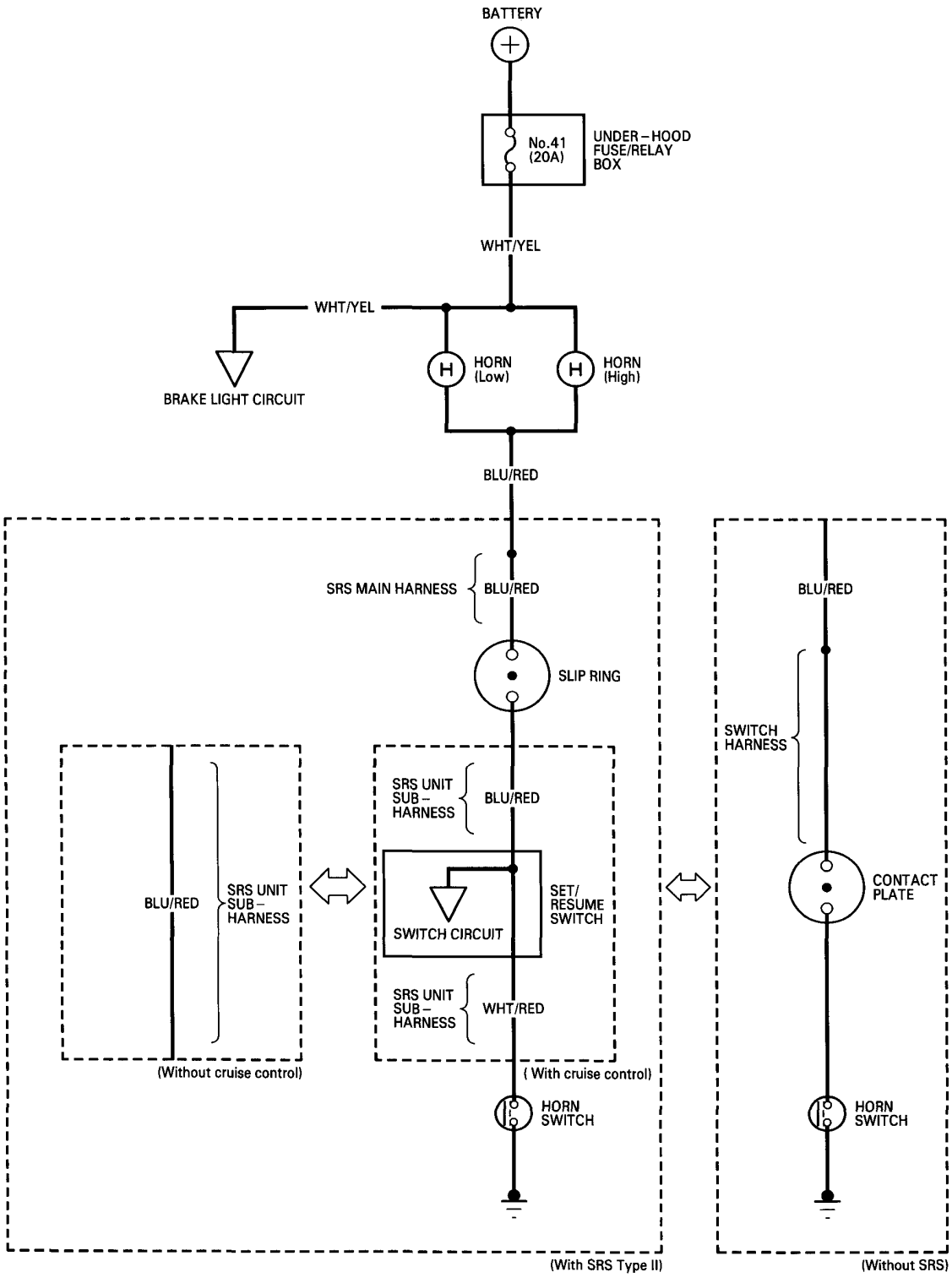

Switch Test (With SRS Type II)

CAUTION:

- **All SRS wire harnesses are covered with yellow insulation.**
- **Replace the entire affected SRS harness assembly if it has an open circuit or damaged wiring.**
- **Before disconnecting the SRS wire harness, turn the ignition switch OFF, disconnect the battery negative cable, then disconnect the positive cable, and wait at least three minutes.**
- **Whenever the ignition switch is ON (II), or has been turned OFF for less than three minutes, be careful not to bump the SRS unit; the airbags could accidentally deploy and cause damage or injuries.**

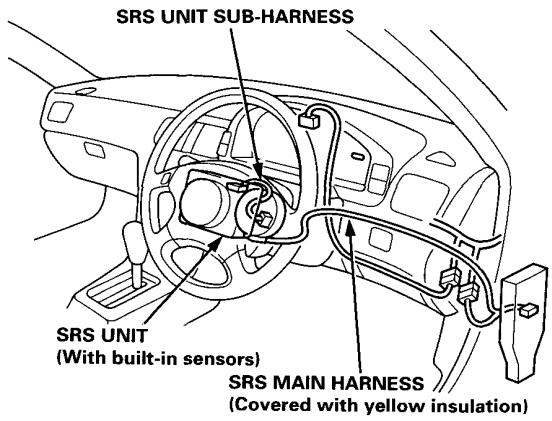

NOTE: Before testing, check No. 41 (20 A) fuse in the under-hood fuse/relay box.

1. Remove the dashboard lower cover.
2. Disconnect the 8-P connector between the main wire harness and SRS main harness.
3. Check for continuity between the BLU/RED wire of the SRS main harness and body ground with the horn switch pressed.

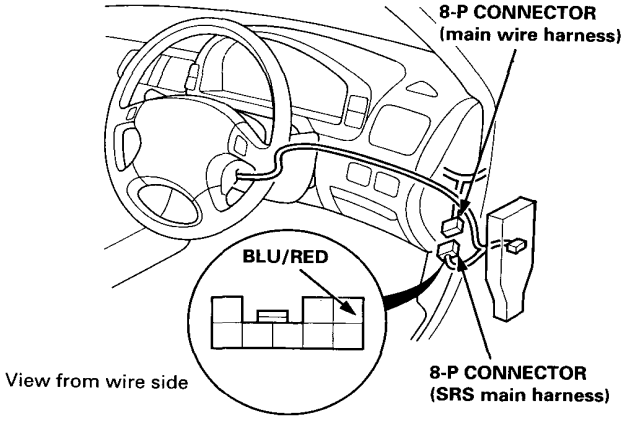

- If there is continuity, the horn switch is OK.
- If there is no continuity, go to step 4.

4. Remove the steering column lower cover, and disconnect the 5-P connector from the slip ring.
5. Check for continuity between C terminal of the slip ring and body ground with the horn switch pressed.

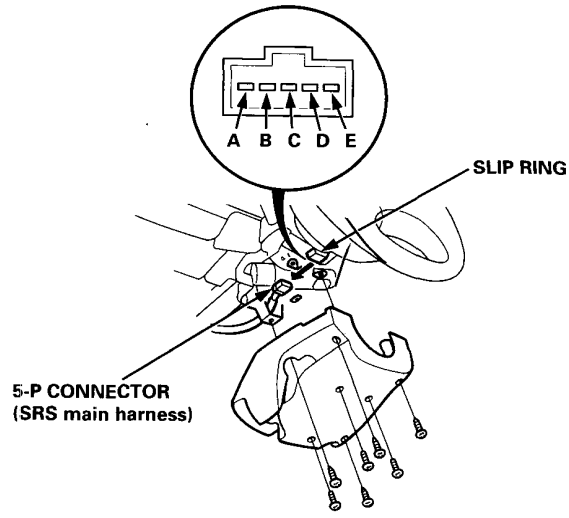

- If there is continuity, check for:
  — bent, loose or corroded terminal.
  — an open in the BLU/RED wire of the SRS main harness.
- If there is no continuity, go to step 6.

Without cruise control:

NOTE: For all steps after step 5 of the procedure for the models without cruise control, refer to page 23-195 of Shop Manual (62SN700).

With cruise control:

6. Carefully remove the cruise control SET/RESUME switch cover in the sequence shown.

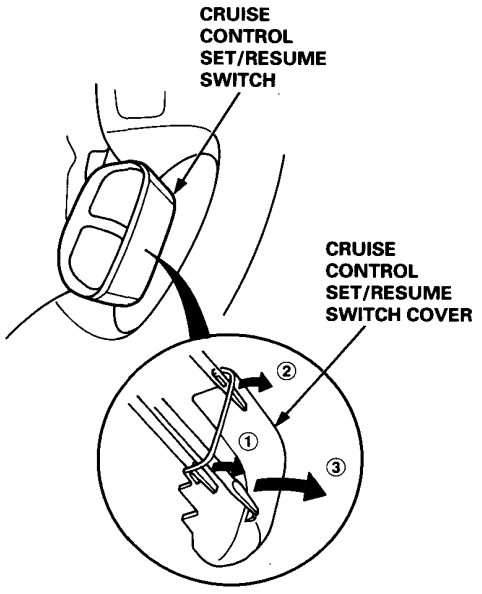

7. Remove the access panel from the steering wheel.

8. Remove the two TORX® bolts using a TORX® T30 bit, then remove the driver's airbag assembly.

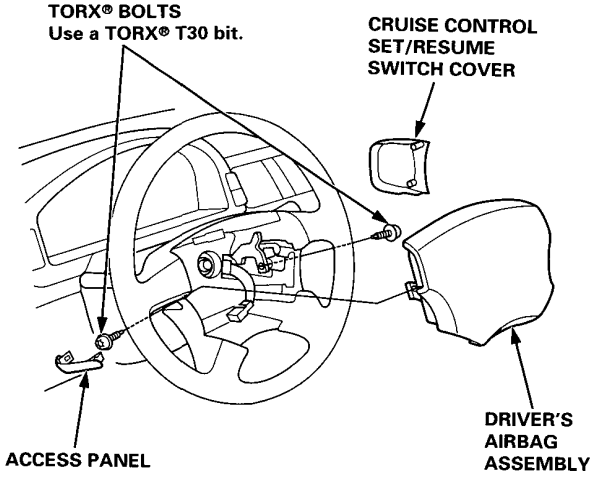

9. Check for continuity between the horn switch positive terminal and the steering column shaft with the horn switch pressed.

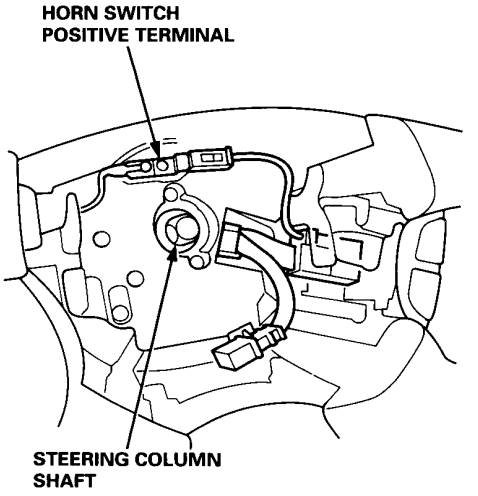

- If there is continuity, check for:
  — bent, loose or corroded terminal.
  — a faulty slip ring.
  — an open in the BLU/RED or WHT/RED wire of the SRS unit sub-harness.
  — a faulty cruise control SET/RESUME switch.
- If there is no continuity, repair or replace the horn switch.

10. Install the steering wheel.

11. Make sure the horn switch, SRS system, and cruise control system work correctly.

Switch Test (With SRS Type III)

CAUTION:

- **All SRS wire harnesses are covered with yellow insulation.**
- **Replace the entire affected SRS harness assembly if it has an open circuit or damaged wiring.**
- **Before disconnecting the SRS wire harness, turn the ignition switch OFF, disconnect the battery negative cable, then disconnect the positive cable, and wait at least three minutes.**
- **Whenever the ignition switch is ON (II), or has been turned OFF for less than three minutes, be careful not to bump the SRS unit; the airbags could accidentally deploy and cause damage or injuries.**
- **Before you disconnect any part of an SRS wire harness, connect the short connectors (RED) to the airbags (SRS Type III).**
- **Refer to additional precautions beginning on page 23-71 in the SRS sub-section.**

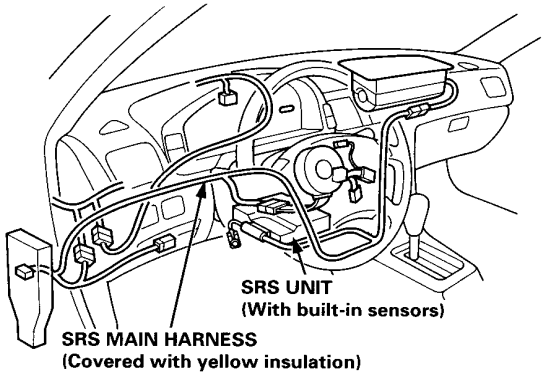

NOTE: Before testing, check No. 41 (20 A) fuse in the under-hood fuse/relay box.

1. Disconnect both the negative cable and positive cable from the battery, and wait at least three minutes.
2. Remove the access panel from the steering wheel, then remove the short connector (RED) from the panel.
3. Disconnect the 3-P connector between the driver's airbag and cable reel, then connect the short connector (RED) to the driver's airbag 3-P connector.

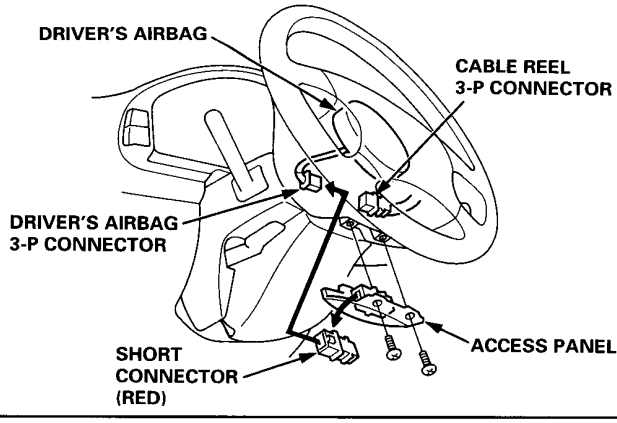

4. Remove the glove box.
5. Disconnect the 3-P connector between the front passenger's airbag and SRS main harness, then connect the short connector (RED) to the front passenger's airbag 3-P connector.

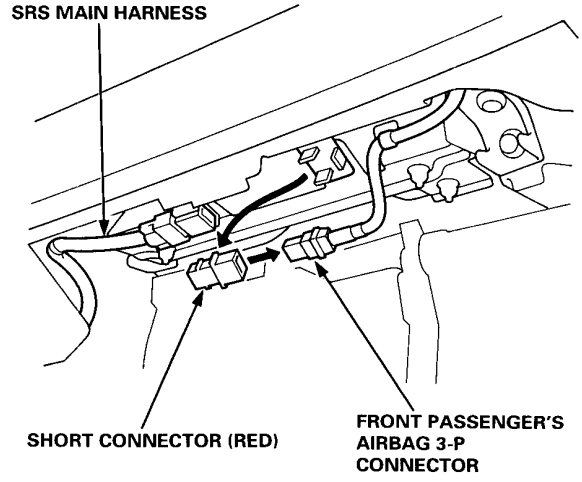

6. Remove the dashboard lower cover.
7. Disconnect the 6-P connector between the cable reel and SRS main harness, then connect Test Harness C only to the cable reel 6-P connector.

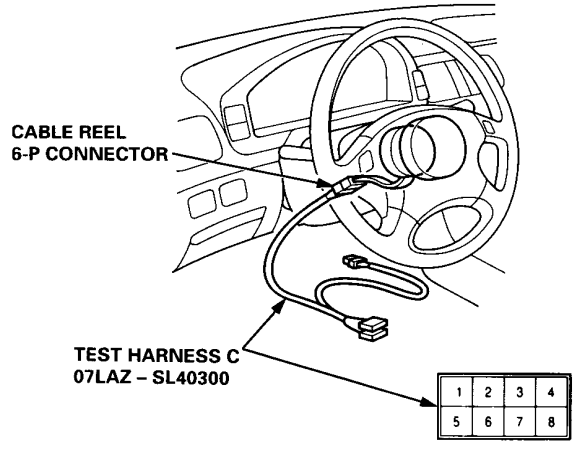

8. Check for continuity between the No. 3 terminal of the 8-P connector of Test Harness C and body ground with the horn switch pressed.

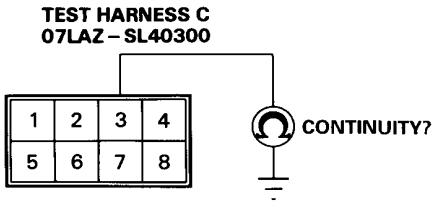

- If there is continuity, the horn switch is OK.
- If there is no continuity, go to step 9.

9. Carefully remove the cruise control SET/RESUME switch cover or *lid cover in the sequence shown.

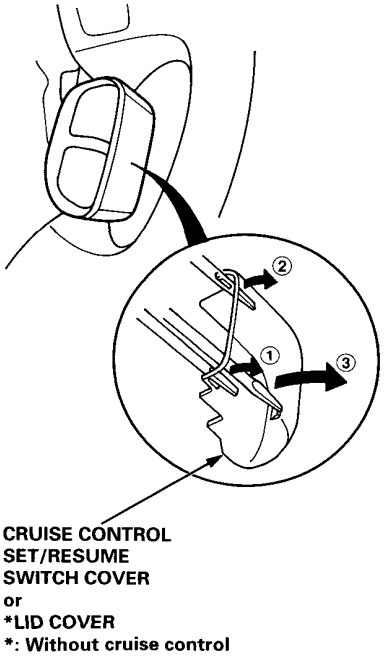

10. Remove the access panel from the steering wheel.
11. Remove the two TORX® bolts using a TORX® T30 bit, then remove the driver's airbag assembly.

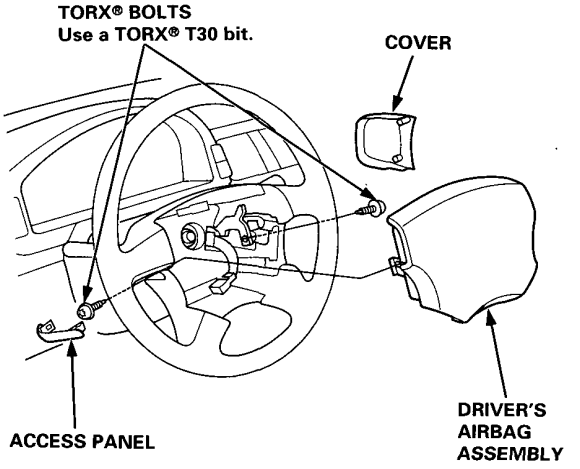

12. Check for continuity between the horn switch positive terminal and steering column shaft with the horn switch pressed.

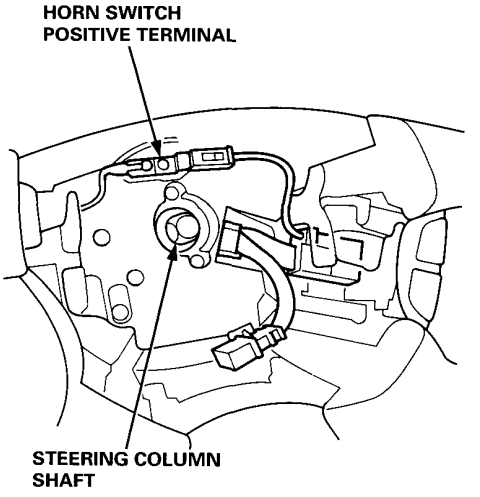

- If there is continuity, check for:
  — a faulty cable reel.
  — a faulty cruise control SET/RESUME switch.
- If there is no continuity, replace the horn switch.

Switch Test (Without SRS)

NOTE: Before testing, check No. 41 (20 A) fuse in the under-hood fuse/relay box.

1. Remove the dashboard lower cover.
2. Disconnect the 12-P connector between the main wire harness and switch harness.
3. Inspect the connector and socket terminals to be sure they are all making good contact.
   - If the terminals are bent, loose or corroded, repair them as necessary, and recheck the system.
   - If the terminals look OK, check for continuity between the terminal and body ground in each horn switch position according to the table.

Terminal / Position	12	BODY GROUND
Press	○	○
Release		

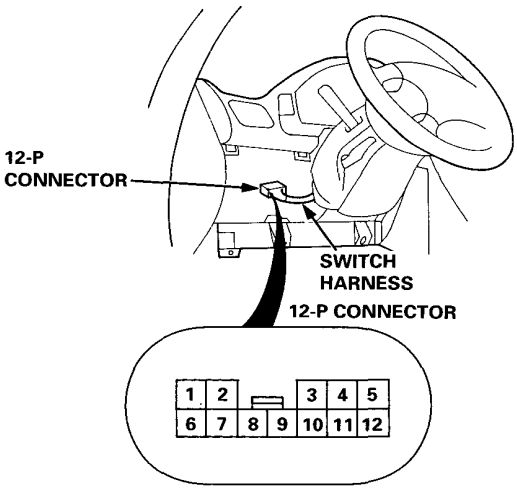

View from wire side

— If there is continuity between them, check for an open in the BLU/RED wire of the main wire harness.
— If there is no continuity between them, go to step 4.

4. Remove the steering wheel, then turn it over.
5. Check for continuity between the hub core and the contact plate in each horn switch position according to the table.

Terminal / Position	HUB CORE	CONTACT PLATE
Press	○	○
Release		

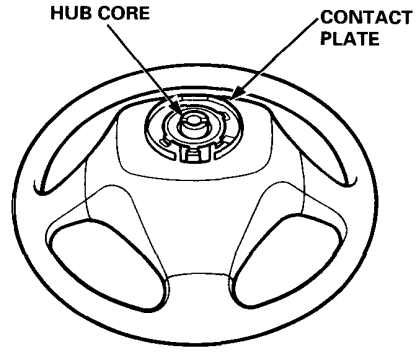

- If there is continuity, check for:
  — an open in the wire of the switch harness.
  — faulty contact between the contact plate and combinaton switch side.
- If there is no continuity, replace the contact plate or horn switch.

Component Location Index

CAUTION:

- **All SRS wire harnesses are covered with yellow insulation.**
- **Replace the entire affected SRS harness assembly if it has an open circuit or damaged wiring.**
- **Before disconnecting the SRS wire harness, turn the ignition switch OFF, disconnect the battery negative cable, then *disconnect the positive cable, and wait at least three minutes.***
- **Whenever the ignition switch is ON (II), or has been turned OFF for less than three minutes, be careful not to bump the SRS unit; the airbags could accidentally deploy and cause damage or injuries.**
- **Before you disconnect any part of an SRS wire harness, connect the short connectors (RED) to the airbags (SRS Type III).**
- **Refer to additional precautions beginning on page 23-71 in the SRS sub-section.**

SRS Type II:

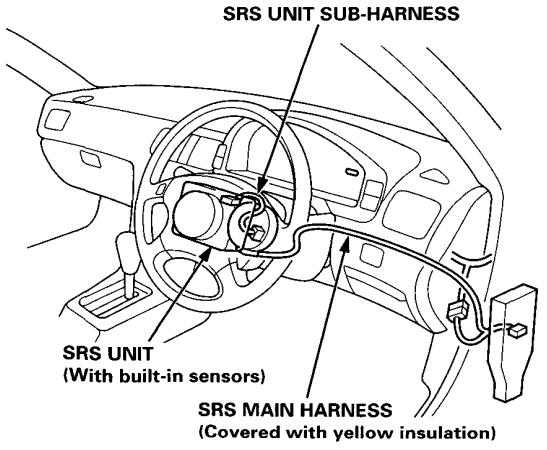

SRS Type III:

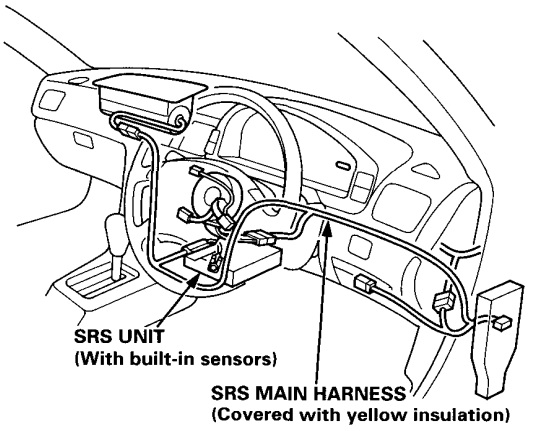

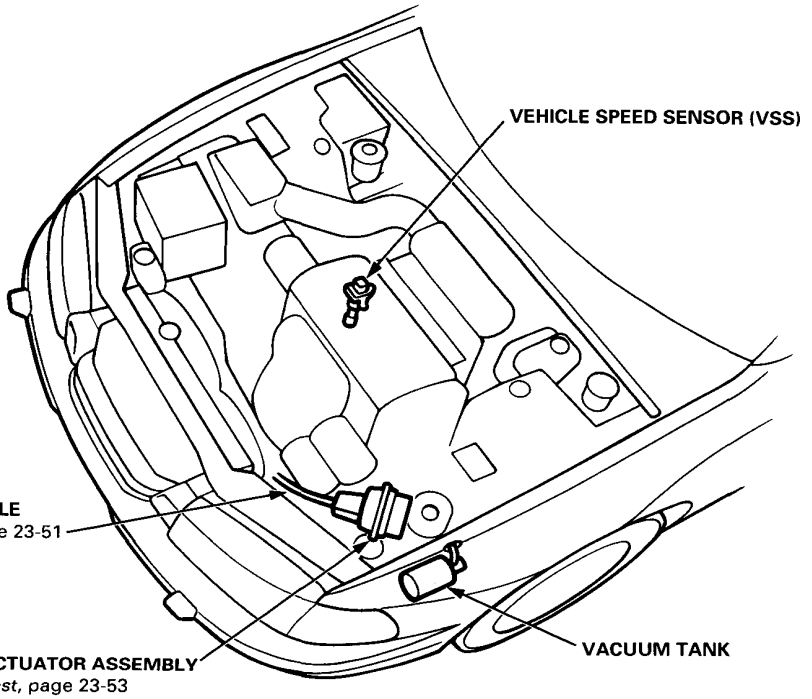

(cont'd)

Component Location Index (cont'd)

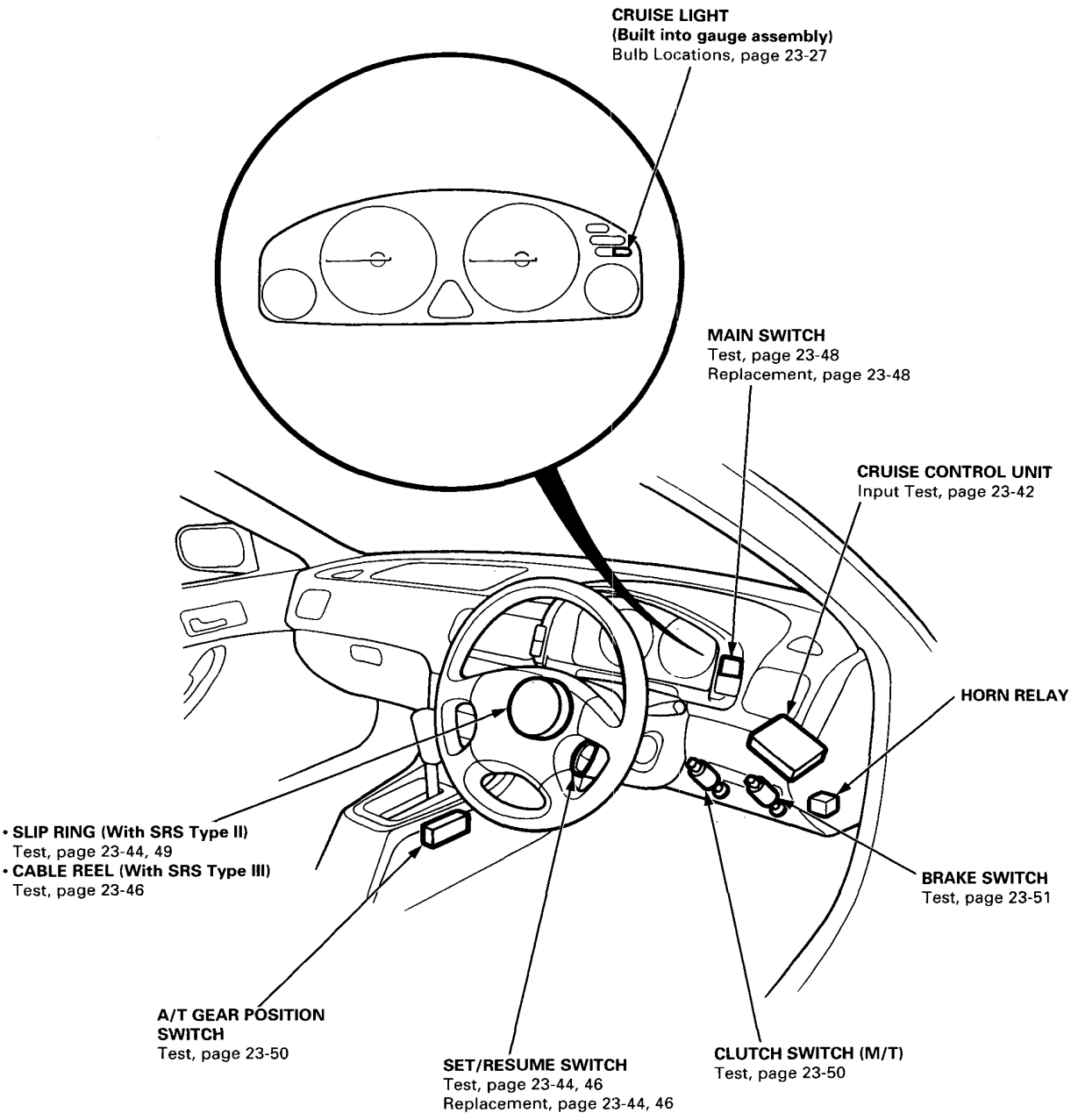

Circuit Diagram (With SRS Type II)

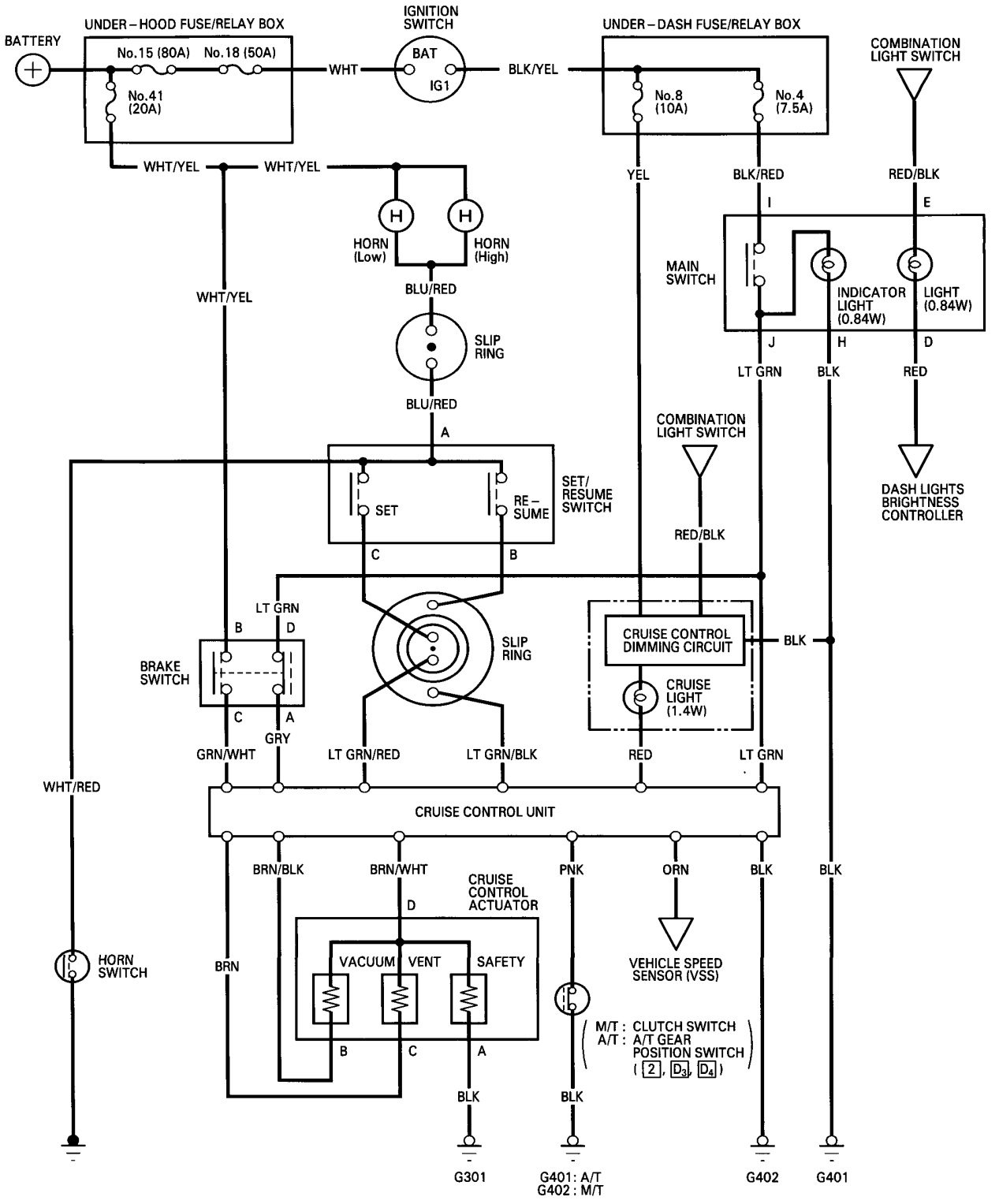

Cruise Control (KE)

Circuit Diagram (With SRS Type III)

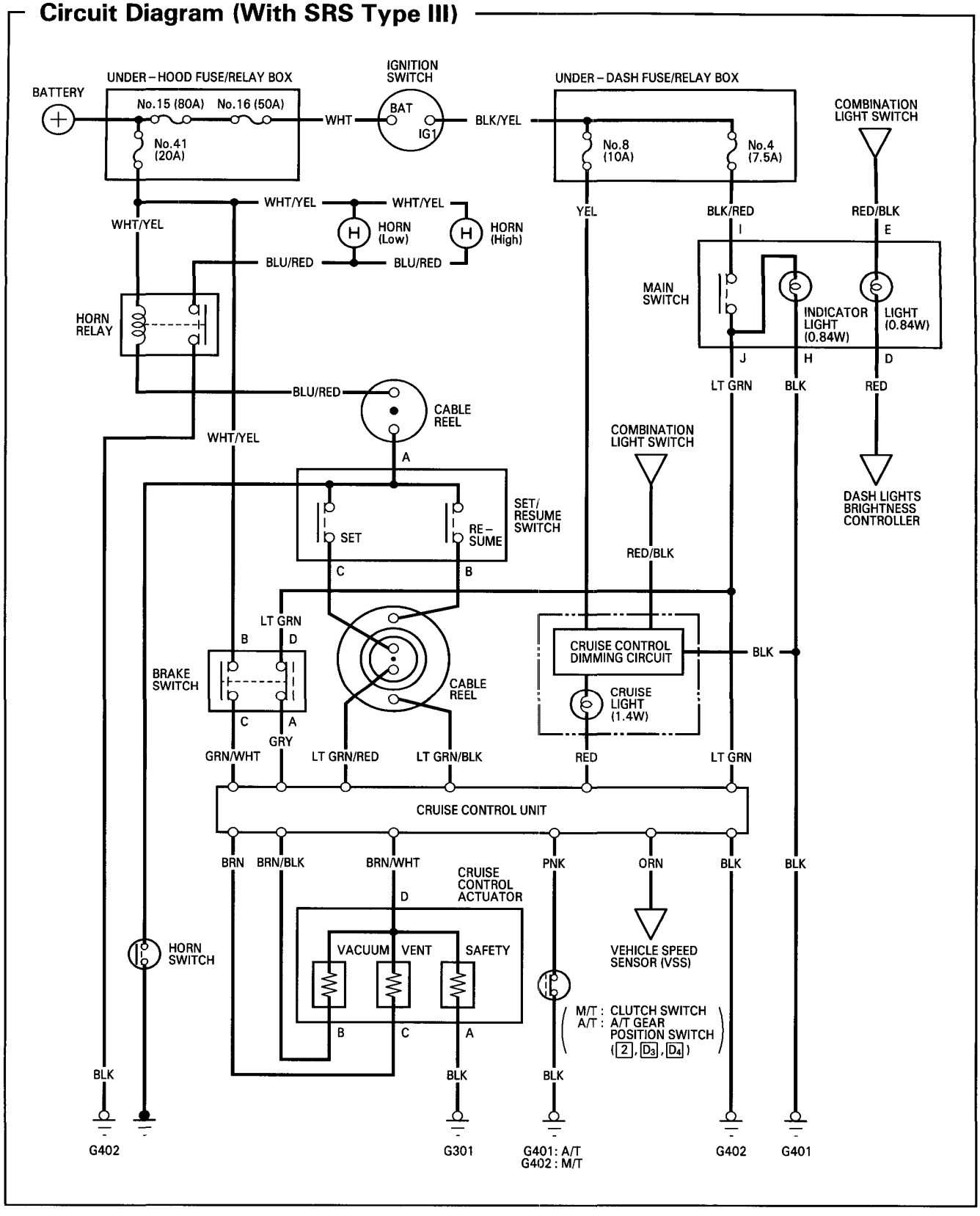

Troubleshooting

NOTE:
- The numbers in the table show the troubleshooting sequence.
- Before troubleshooting,
  — check the No. 8 (10 A) and No. 4 (7.5 A) fuses in the under-dash fuse/relay box, and the No. 41 (20 A) fuse in the under-hood fuse/relay box.
  — check that the horn sounds.

Symptom \ Item to be inspected	Main switch	SET/RESUME switch	Brake switch and mounting	Clutch switch and mounting (M/T)	A/T gear position switch (A/T)	Vehicle speed sensor (VSS)	Dimming circuit in gauges	Actuator and cable deflection	Control unit	Poor ground	Open circuit, loose or disconnected terminals
Cruise control cannot be set.	1	2	3	4					5	G301 G401 G402	LT GRN/RED, LT GRN, GRY, ORN, BRN/WHT, BRN/BLK, BRN, PNK
Cruise control can be set, but indicator light does not go on.							1		2	G401	YEL or RED
Cruise speed is noticeably higher or lower than what was set.						1		2	3		
Excessive overshooting or undershooting when trying to set speed.						2		1	3		
Steady speed is not held even on a flat road with cruise control set.						1		2	3		
Car does not decelerate or accelerate accordingly when SET or RESUME button is pushed.		1							2		LT GRN/BLK LT GRN/RED
Set speed is not cancelled when clutch pedal is pushed (M/T).				1					2		PNK
Set speed is not cancelled when shift lever is moved to N (A/T).					1				2		PNK
Set speed is not cancelled when brake pedal is pushed.			1						2		GRN/WHT
Set speed is not cancelled when main switch is pushed OFF.	1								2		LT GRN
Set speed is not resumed when RESUME button is pushed (with main switch on, but set speed is temporarily cancelled).		1							2		LT GRN/BLK LT GRN/RED

Control Unit Input Test

CAUTION:
- All SRS wire harnesses are covered with yellow insulation.
- Replace the entire affected SRS harness assembly if it has an open circuit or damaged wiring.
- Before disconnecting the SRS wire harness, turn the ignition switch OFF, disconnect the battery negative cable, then disconnect the positive cable, and wait at least three minutes.
- Whenever the ignition switch is ON (II), or has been turned OFF for less than three minutes, be careful not to bump the SRS unit; the airbags could accidentally deploy and cause damage or injuries.
- Before you disconnect any part of an SRS wire harness, connect the short connectors (RED) to the airbags (SRS Type III).
- Refer to additional precautions beginning on page 23-71 in the SRS sub-section.

SRS Type II:

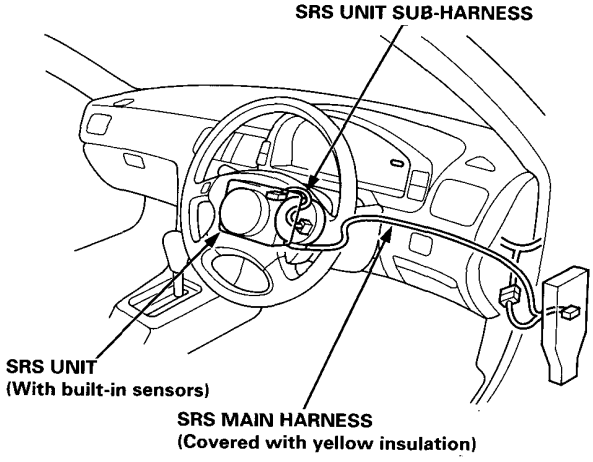

SRS Type III:

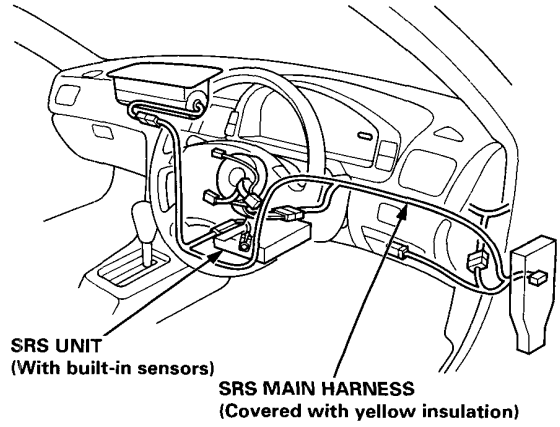

1. Remove the dashboard lower cover.
2. Disconnect the 14-P connector from the control unit.
3. Inspect the connector and socket terminals to be sure they are all making good contact.

   - If the terminals are bent, loose or corroded, repair them as necessary, and recheck the system.
   - If the terminals look OK, make the following input tests at the connector.
     — If any test indicates a problem find and correct the cause, then recheck the system.
     — If all the input tests prove OK, the control unit must be faulty; replace it.

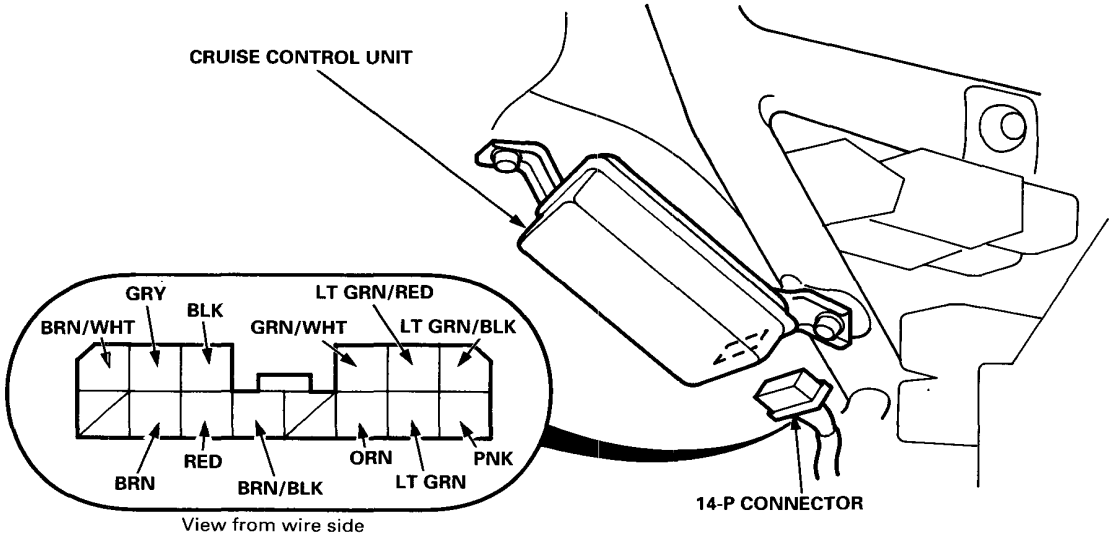

No.	Wire	Test condition	Test: Desired result	Possible cause if result is not obtained
1	BLK	Under all conditions	Check for continuity to ground: There should be continuity.	• Poor ground (G402) • An open in the wire
2	LT GRN	Ignition switch ON (II) and main switch ON	Check for voltage to ground: There should be battery voltage.	• Blown No. 4 (7.5 A) fuse in the under-dash fuse/relay box • Faulty main switch • An open in the wire
3	LT GRN/ BLK	Resume button pushed	Check for voltage to ground: There should be battery voltage.	• Blown No. 41 (20 A) fuse in the under-hood fuse/relay box • Faulty SET/RESUME switch • Faulty cable reel or slip ring • An open in the wire
4	LT GRN/ RED	Set button pushed		
5	PNK	M/T: Clutch pedal released A/T: Shift lever in 2, D3 or D4	Check for continuity to ground: There should be continuity. NOTE: There should be no continuity when the clutch pedal is depressed or when the shift lever is in other positions.	• Faulty or misadjusted clutch switch (M/T) • Faulty A/T gear position switch • Poor ground (A/T: G401, M/T: G402) • An open in the wire
6	ORN	Ignition switch ON (II) and main switch ON; raise the front of the car, and rotate one wheel slowly.	Check for voltage between the ORN ⊕ and BLK ⊖ terminals: There should be 0 – 5 V or more –0 – 5 V or more repeatedly.	• Faulty vehicle speed sensor (VSS) • An open in the wire
7	GRY	Ignition switch ON (II), main switch ON and brake pedal pushed, then released	Check for voltage to ground: There should be 0 V with the pedal pushed, and battery voltage with the pedal released.	• Faulty brake switch • An open in the wire
8	GRN/WHT	Brake pedal pushed, then released	Check for voltage to ground: There should be battery voltage with the pedal pushed, and 0 V with the pedal released.	• Blown No. 41 (20 A) fuse in the under-hood fuse/relay box • Faulty brake switch • An open in the wire
9	RED	Ignition switch ON (II)	Attach to ground: Cruise light in the gauge assembly comes on.	• Blown bulb • Blown No. 8 (10 A) fuse in the under-dash fuse/relay box • Faulty dimming circuit in the gauge assembly • An open in the wire
10	BRN	Under all conditions	Check for resistance to ground: There should be 80 – 120 Ω.	• Faulty actuator solenoid • An open in the wire
11	BRN/BLK	Under all conditions	Check for resistance to ground: There should be 70 – 110 Ω.	
12	BRN/WHT	Under all conditions	Check for resistance to ground: There should be 40 – 60 Ω.	

SET/RESUME Switch Test (With SRS Type II)

CAUTION:

- **All SRS wire harnesses are covered with yellow insulation.**
- **Replace the entire affected SRS harness assembly if it has an open circuit or damaged wiring.**
- **Before disconnecting the SRS wire harness, turn the ignition switch OFF, disconnect the battery negative cable, then disconnect the positive cable, and wait at least three minutes.**
- **Whenever the ignition switch is ON (II), or has been turned OFF for less than three minutes, be careful not to bump the SRS unit; the airbags could accidentally deploy and cause damage or injuries.**

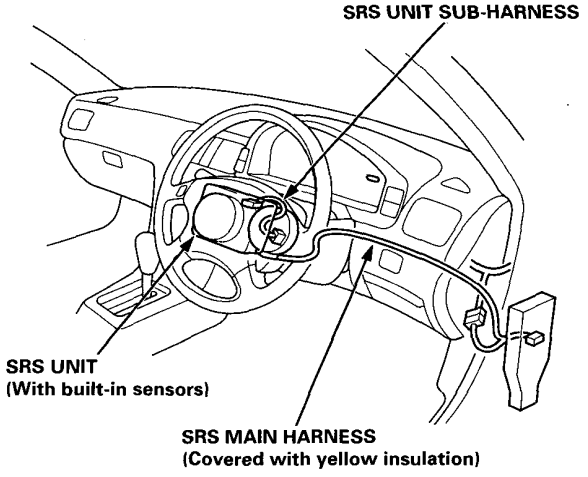

1. Remove the dashboard lower cover.

2. Disconnect the 8-P connector between the main wire harness and SRS main harness.

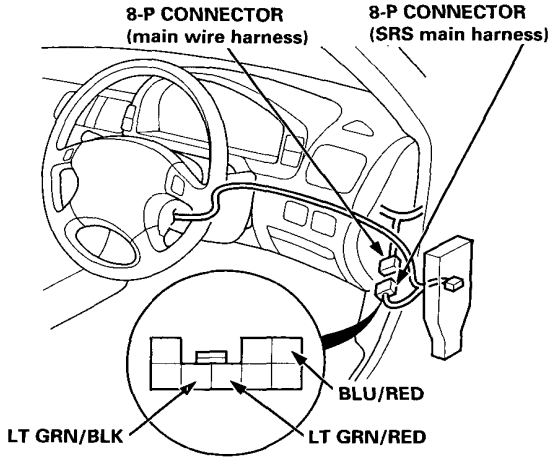

View from wire side

3. Check for continuity between the terminals in each SET/RESUME switch position according to the table.

Position \ Terminal	BLU/RED	LT GRN/RED	LT GRN/BLK
SET (ON)	○	○	
RESUME (ON)	○		○

- If there is continuity, the SET/RESUME switch is OK.
- If there is no continuity, go to step 4.

4. Remove the steering column lower cover, and disconnect the 5-P connector from the slip ring.

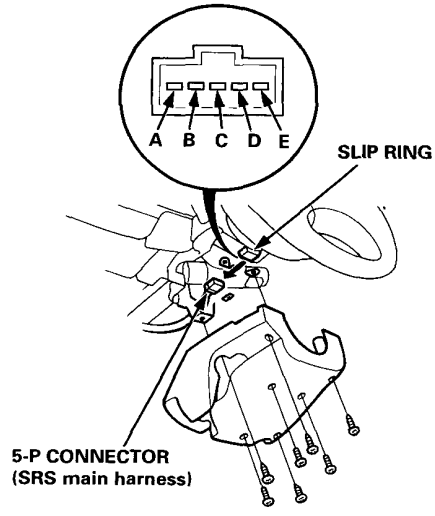

5. Check for continuity between the terminals of the slip ring in each SET/RESUME switch position according to the table.

Position \ Terminal	A	B	C
SET (ON)		○	○
RESUME (ON)	○		○

- If there is continuity, check for:
  — bent, loose or corroded terminal.
  — an open in the wire of the SRS main harness.
- If there is no continuity, go to step 6.

6. Carefully remove the cruise control SET/RESUME switch cover in the sequence shown.

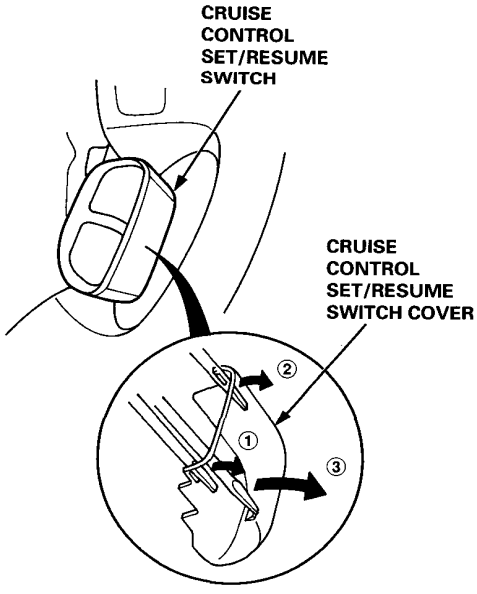

7. Remove the two screws and cruise control SET/RESUME switch.

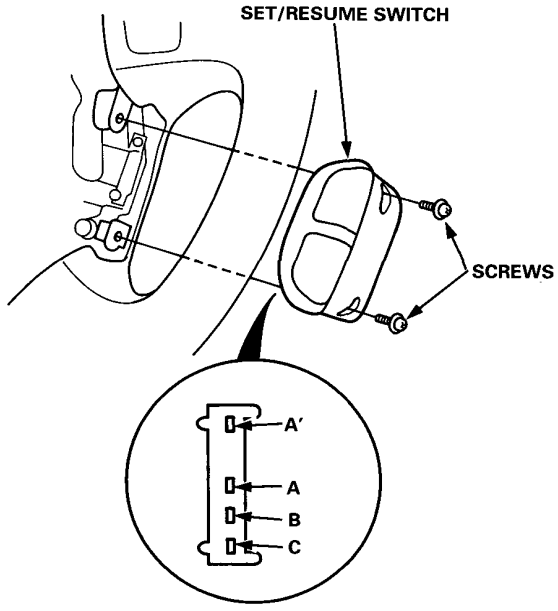

8. Check for continuity between the terminals in each switch position according to the table.

Position \ Terminal	A	A'	B	C
OFF	○	○		
SET (ON)	○	○		○
RESUME (ON)	○	○	○	

- If there is no continuity in one or both positions, replace the switch.
- If there is continuity and it matches the table, check for:
  — an open in the SRS unit sub-harness.
  — a faulty slip ring.

SET/RESUME Switch Test (With SRS Type III)

CAUTION:

- **All SRS wire harnesses are covered with yellow insulation.**
- **Replace the entire affected SRS harness assembly if it has an open circuit or damaged wiring.**
- **Before disconnecting the SRS wire harness, turn the ignition switch OFF, disconnect the battery negative cable, then disconnect the positive cable, and wait at least three minutes.**
- **Whenever the ignition switch is ON (II), or has been turned OFF for less than three minutes, be careful not to bump the SRS unit; the airbags could accidentally deploy and cause damage or injuries.**
- **Before you disconnect any part of an SRS wire harness, connect the short connectors (RED) to the airbags (SRS Type III).**
- **Refer to additional precautions beginning on page 23-71 in the SRS sub-section.**

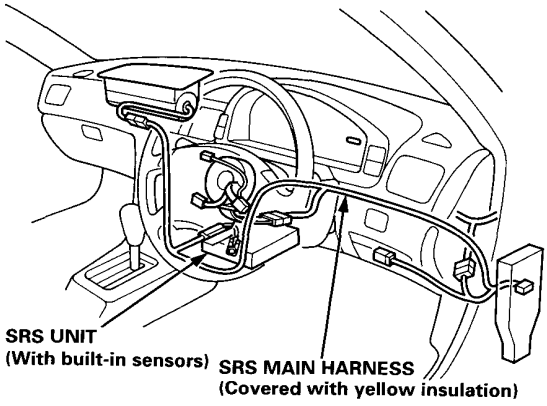

NOTE: Before testing, check No. 41 (20 A) fuse in the under-hood fuse/relay box.

1. Disconnect both the negative cable and positive cable from the battery, and wait at least three minutes.
2. Remove the access panel from the steering wheel, then remove the short connector (RED) from the panel.

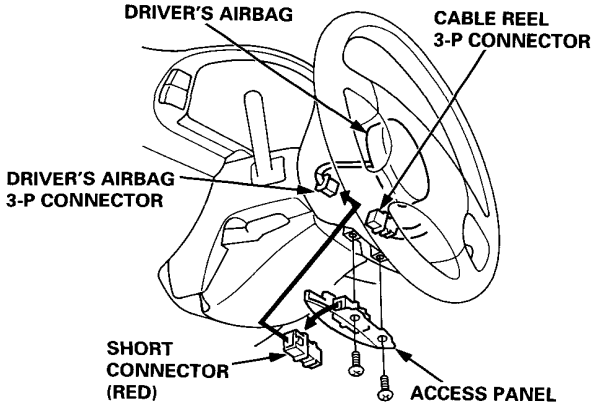

3. Disconnect the 3-P connector between the driver's airbag and cable reel, then connect the short connector (RED) to the driver's airbag 3-P connector.
4. Remove the glove box.
5. Disconnect the 3-P connector between the front passenger's airbag and SRS main harness, then connect the short connector (RED) to the front passenger's airbag 3-P connector.

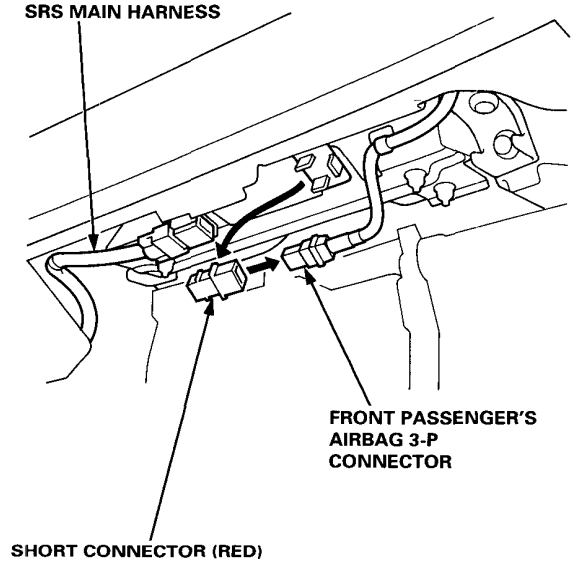

6. Remove the dashboard lower cover.
7. Disconnect the 6-P connector between the cable reel and SRS main harness, then connect Test Harness C only to the cable reel 6-P connector.

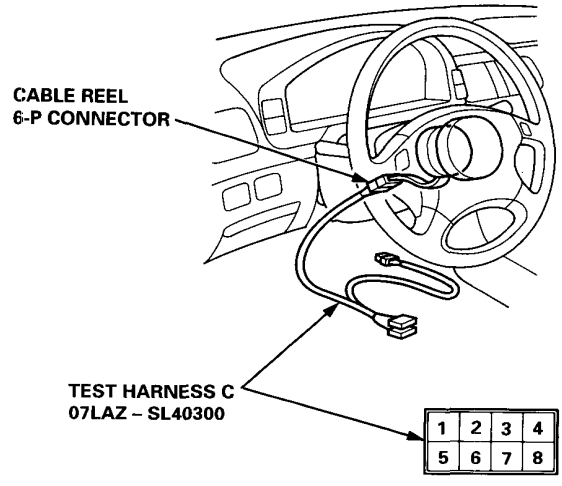

8. Check for continuity between the terminals of Test Harness C in each switch position according to the table.

Position \ Terminal	1	2	3
SET (ON)		○	○
RESUME (ON)	○		○

- If there is continuity, and it matches the table, the switch is OK.
- If there is no continuity in one or both positions, go to step 9.

9. Carefully remove the cruise control SET/RESUME switch cover in the sequence shown.

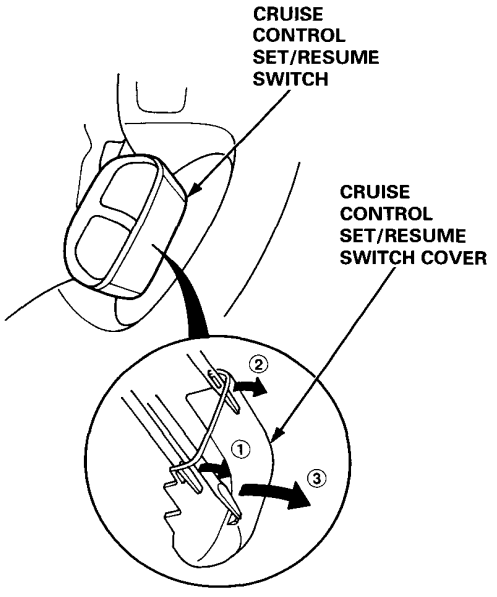

10. Remove the two screws and cruise control SET/RESUME switch.

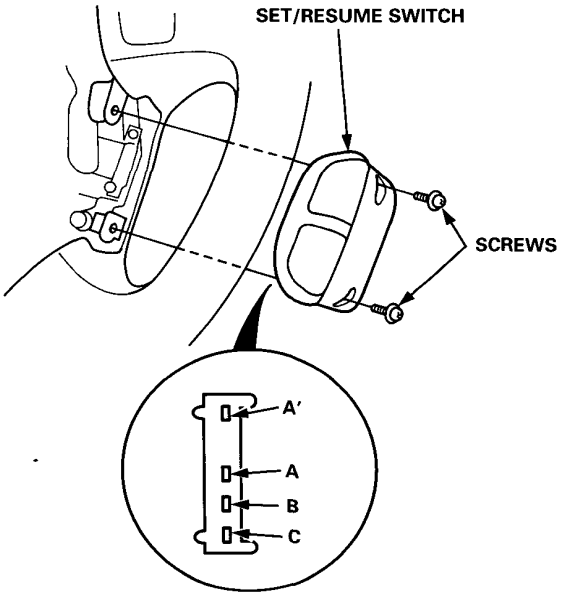

11. Check for continuity between the terminals in each switch position according to the table.

Position \ Terminal	A	A'	B	C
OFF	○	○		
SET (ON)	○	○		○
RESUME (ON)	○	○	○	

- If there is no continuity in one or both positions, replace the switch.
- If there is continuity and it matches the table, replace the cable reel.

Cruise Control (KE)

Main Switch Replacement

1. Remove the two screws and the instrument panel.
2. Disconnect each connector from the instrument panel.

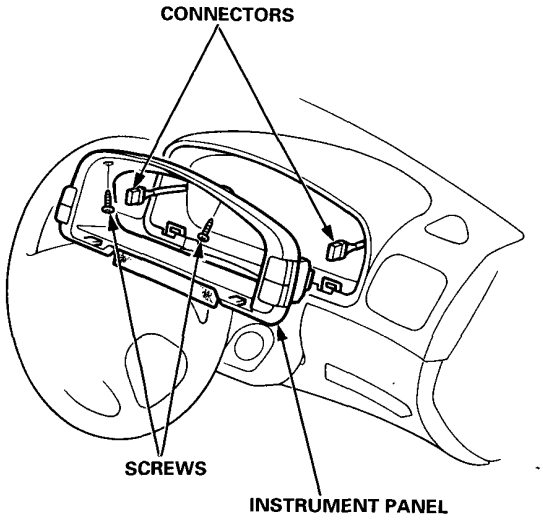

3. Remove the two screws, then remove the cruise control main switch and rear window defogger switch as assembly from the instrument panel.

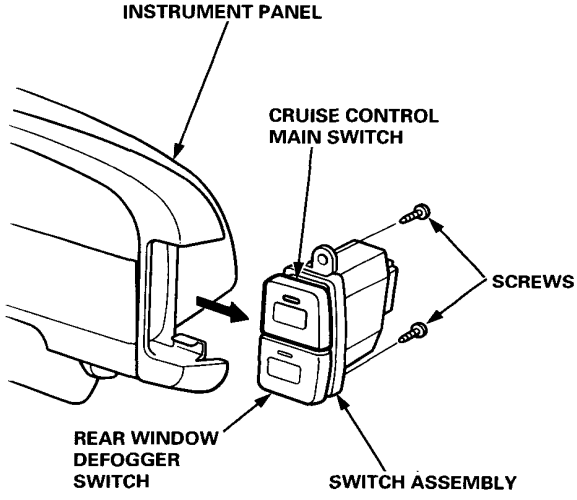

Main Switch Test

1. Remove the cruise control main switch.
2. Check for continuity between the terminals in each switch position according to the table.

Position \ Terminal	D		E	H		I	J
OFF	○	⊕	○	○	⊕	—	○
ON	○	⊕	○	○	⊕	○	○

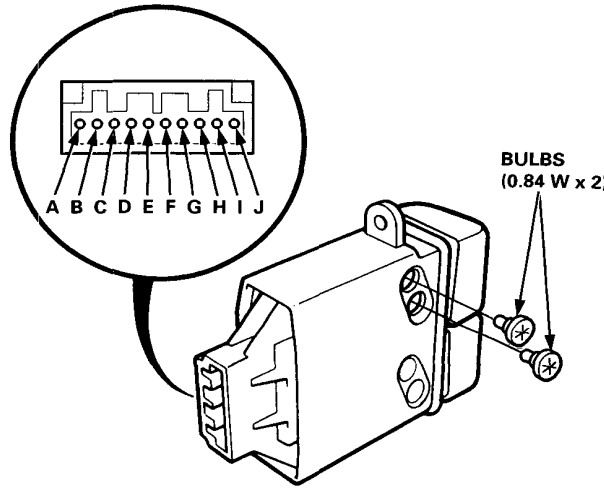

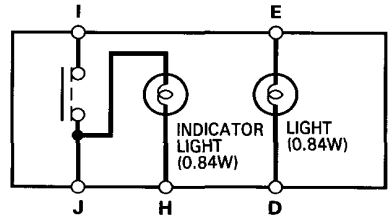

Slip Ring Test (With SRS Type II)

CAUTION:

- ***All* SRS wire harnesses are covered with yellow insulation.**
- **Replace the entire affected SRS harness assembly if it has an open circuit or damaged wiring.**
- **Before disconnecting the SRS wire harness, turn the ignition switch OFF, disconnect the battery negative cable, then disconnect the positive cable, and wait at least three minutes.**
- **Whenever the ignition switch is ON (II), or has been turned OFF for less than three minutes, be careful not to bump the SRS unit; the airbags could accidentally deploy and cause damage or injuries.**

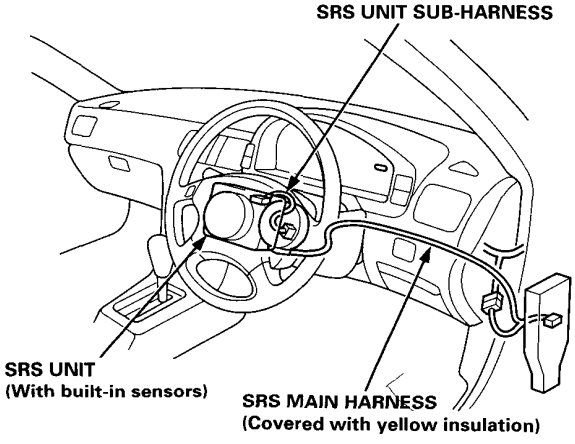

1. Carefully remove the access panel and cruise control SET/RESUME switch cover.

2. Remove the two TORX® bolts using a TORX® T30 bit, then remove the driver's airbag assembly.

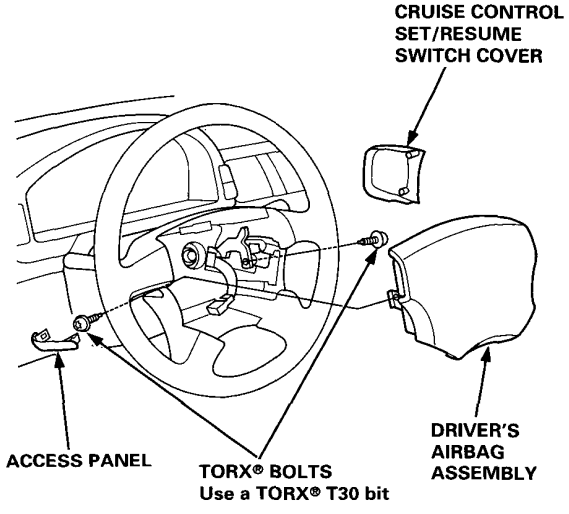

3. Disconnect the 5-P connector between the slip ring and SRS main harness.

4. Remove the four screws and slip ring.

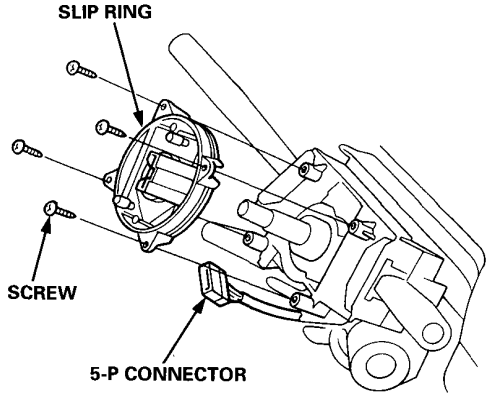

5. While turning the slip ring, check for continuity between the A and A', B and B', C and C', and D and D' terminals. There should be continuity.

FRONT (Steering wheel side):

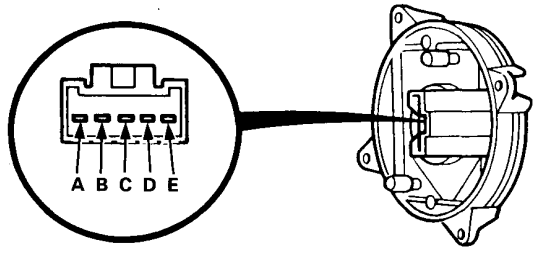

REAR (Combination switch side):

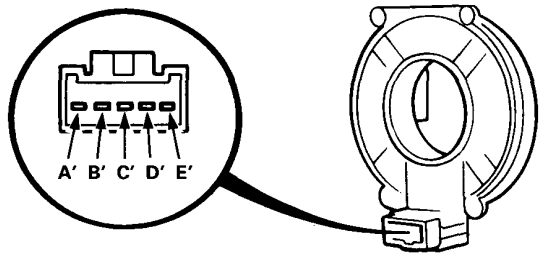

- If there is no continuity in any terminals, replace the slip ring.

Clutch Switch Test

1. Disconnect the 3-P connector from the clutch switch.
2. Check for continuity between the terminals according to the table.

Terminal / Clutch Pedal	B	C
PUSHED		
RELEASED	○	○

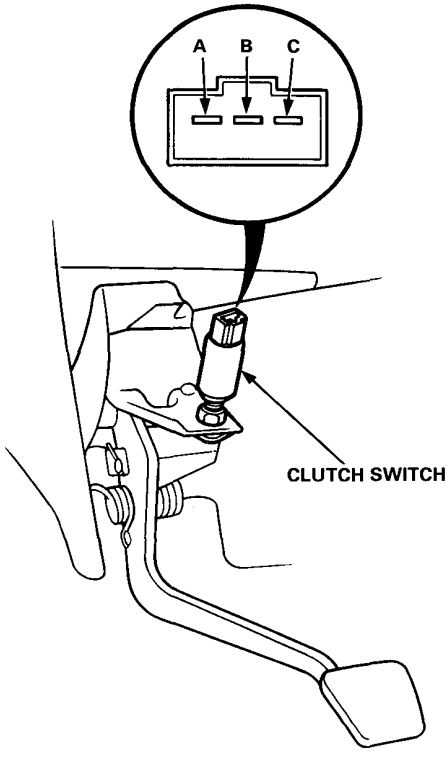

3. If necessary, replace the switch or adjust pedal height.

A/T Gear Position Switch Test

1. Remove the console, then disconnect the 12-P connector from the switch.

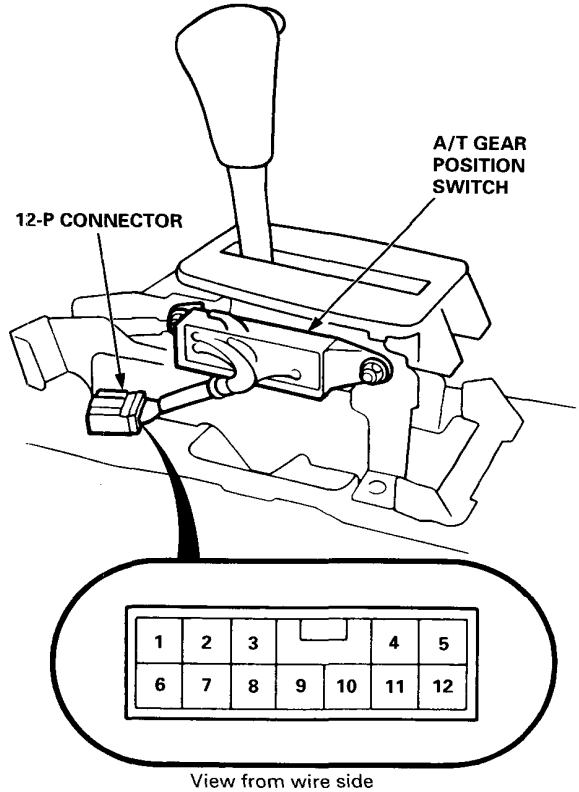

View from wire side

2. Check for continuity between the terminals in each switch position according to the table.

Terminal / Position	5	8
1		
2	○	○
D3	○	○
D4	○	○
N		
R		
P		

3. If necessary, replace the switch.

Brake Switch Test

1. Disconnect the 4-P connector from the brake switch.
2. Check for continuity between the terminals according to the table.

Terminal / Brake Pedal	A	B	C	D
PUSHED		○	○	
RELEASED	○			○

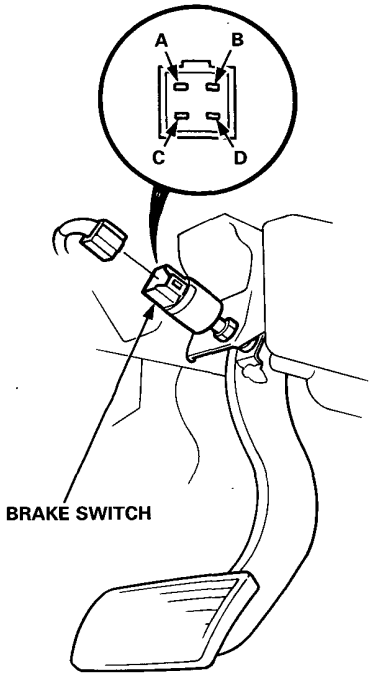

3. *If necessary, replace the switch or adjust pedal height.*

Actuator Cable Adjustment

1. Check that the actuator cable operates smoothly with no binding or sticking.
2. Start the engine and allow it to warm up (radiator fan comes on).
3. Measure the amount of movement of the actuator rod until the cable pulls on the accelerator lever (*engine speed starts to increase*). Free play should be 11 ± 1.5 mm (0.43 ± 0.06 in).

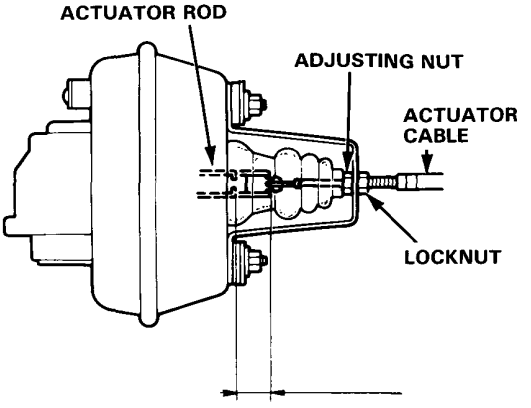

LOCKNUT FREE PLAY: 11 ± 1.5 mm (0.43 ± 0.06 in)

4. If free play is not within specs, loosen the locknut and turn the adjusting nut as required.

   NOTE: If necessary, check the throttle cable free play, then recheck the actuator rod free play.

5. Retighten the locknut and recheck the free play.

Actuator Replacement

1. Pull the boot back and loosen the locknut, then disconnect the cable from the bracket.
2. Disconnect the cable end from the actuator rod.

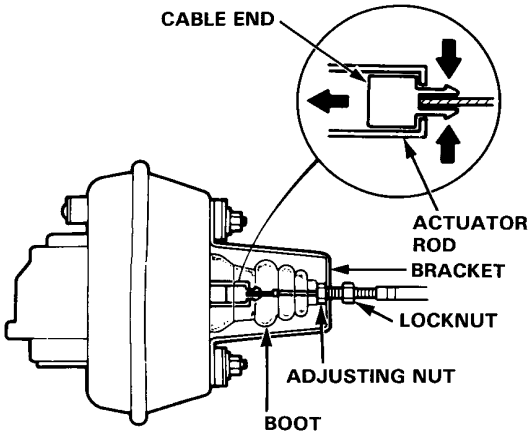

3. Disconnect the 4-P connector from the actuator.
4. Pull the vent hose out of its grommet.
5. Remove the two mounting bolts and the actuator with the bracket.

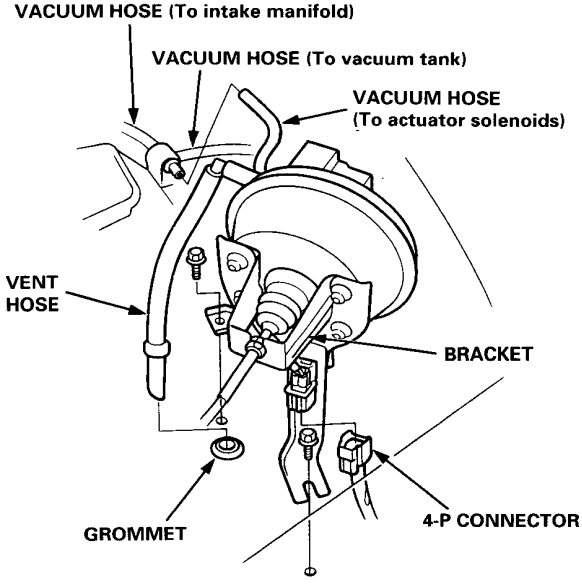

6. Disconnect the vacuum hose from the check valve.

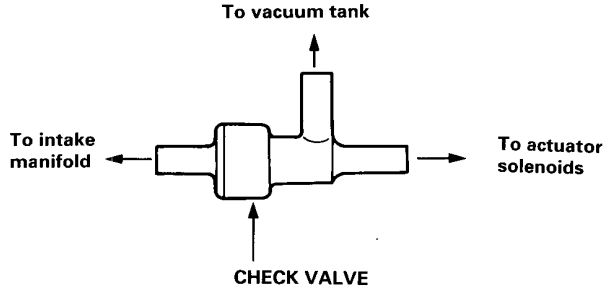

7. Install in the reverse order of removal, and adjust free play at the actuator rod after connecting the cable.

Actuator Test

1. Disconnect the actuator cable from the actuator rod and disconnect the 4-P connector.

2. Connect battery power to the D terminal and ground to the A, B, and C terminals.

3. Connect a vacuum pump to the check valve. Then apply vacuum to the actuator.

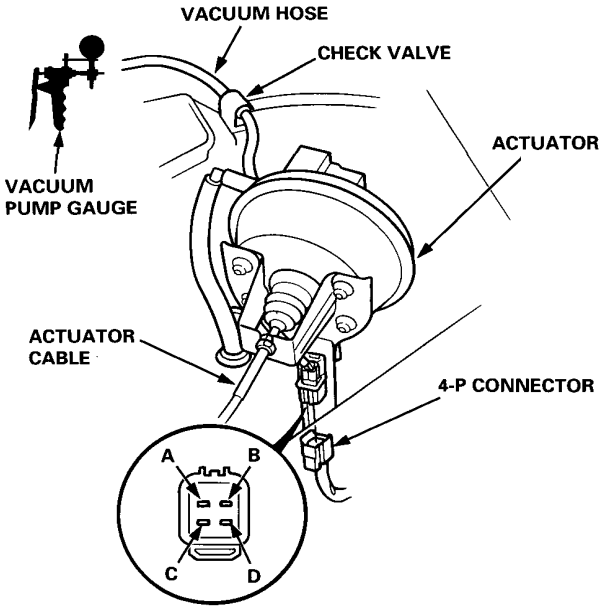

View from terminal side

4. The actuator rod should pull in completely. If the rod pulls in only part-way or not at all, check for a leaking vacuum line or defective solenoid.

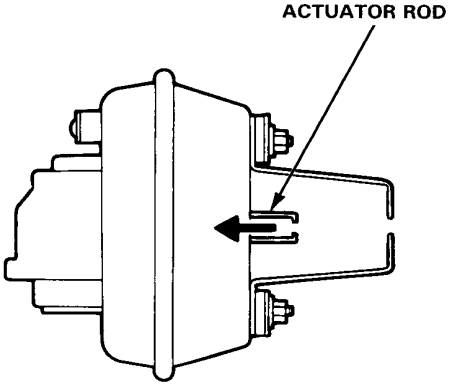

5. With voltage and vacuum still applied, try to pull the actuator rod out by hand. You should not be able to pull out. If you can, it is defective.

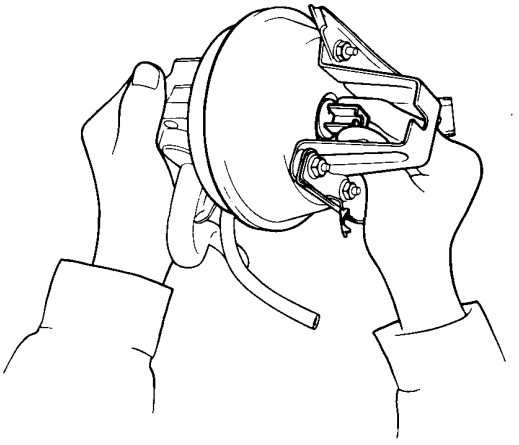

6. Disconnect ground from the C terminal. The actuator rod should return. If it does not return, but the vent hose and filter are not plugged, the solenoid valve assembly is defective.

7. Repeat steps 2 through 5, and disconnect ground from the A terminal. The actuator rod should return. If it does not return, but the vent hose and filter are not plugged, the solenoid valve assembly is defective.

8. If you replace the solenoid valve assembly, be sure to use new O-rings on each solenoid.

Actuator Disassembly

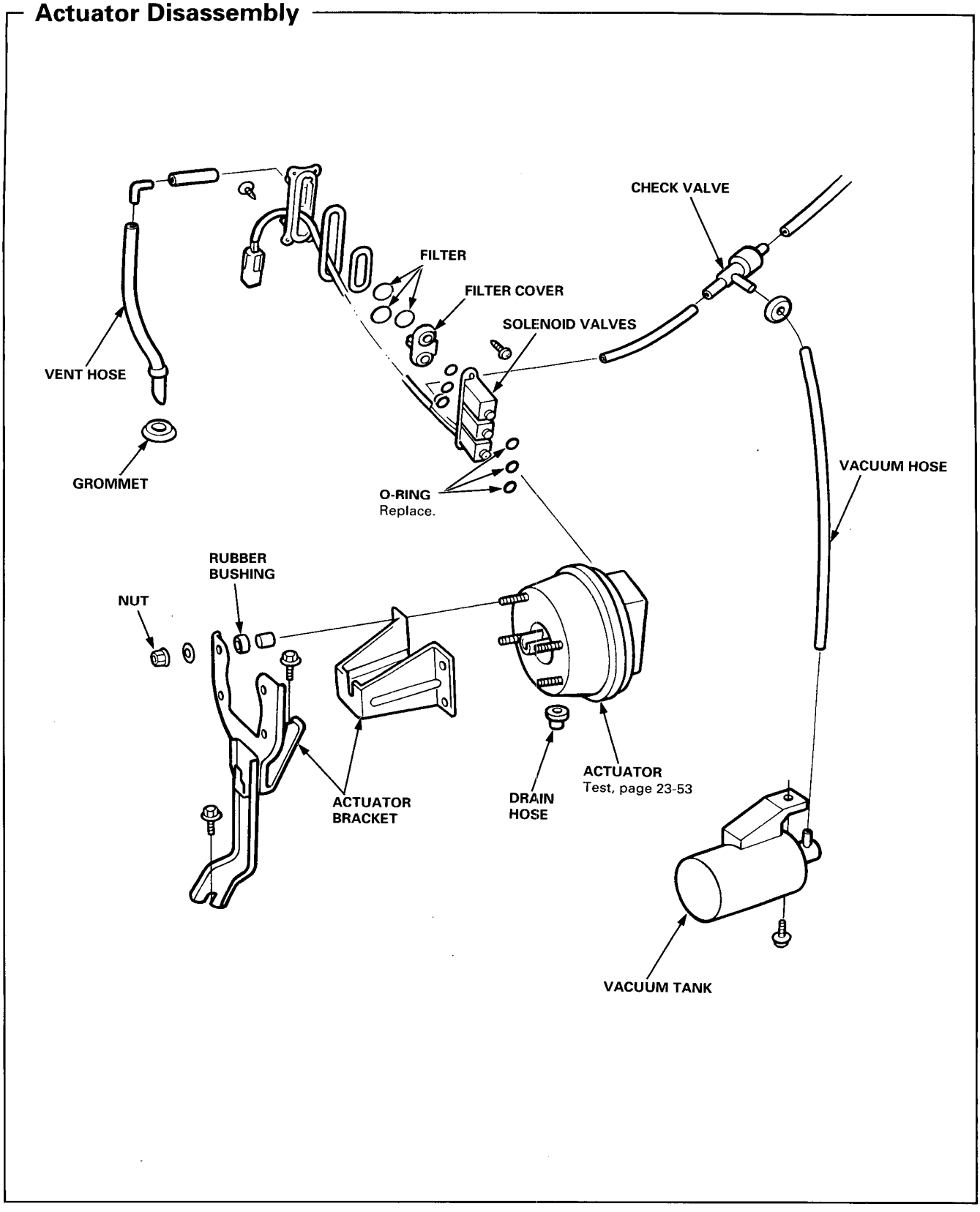

Supplemental Restraint System (SRS)-Type II

Component/Wiring Location Index 23-56
Circuit Diagram 23-57
Troubleshooting
Self-diagnosis Procedures 23-58
Diagnostic Trouble Code (DTC) Chart 23-59

Component/Wiring Location Index (SRS-Type II)

CAUTION: Make sure all SRS ground locations are clean and grounds are securely attached.

NOTE:
- All SRS electrical wiring harnesses are covered with yellow outer insulation.
- Replace the entire affected SRS harness assembly if it has an open circuit or damaged wiring.
- RHD type is symmetrical to LHD type.

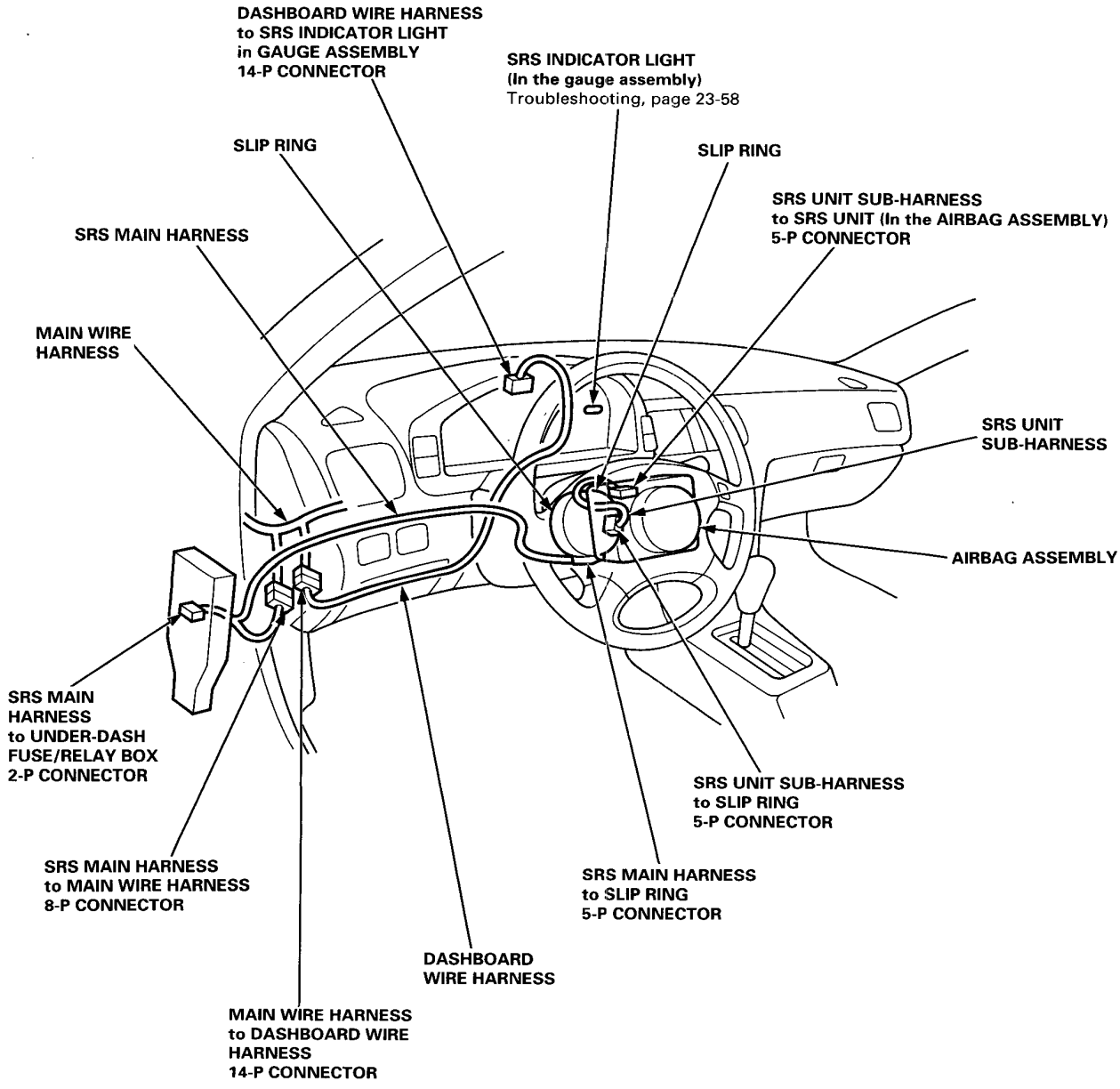

Circuit Diagram (SRS-Type II)

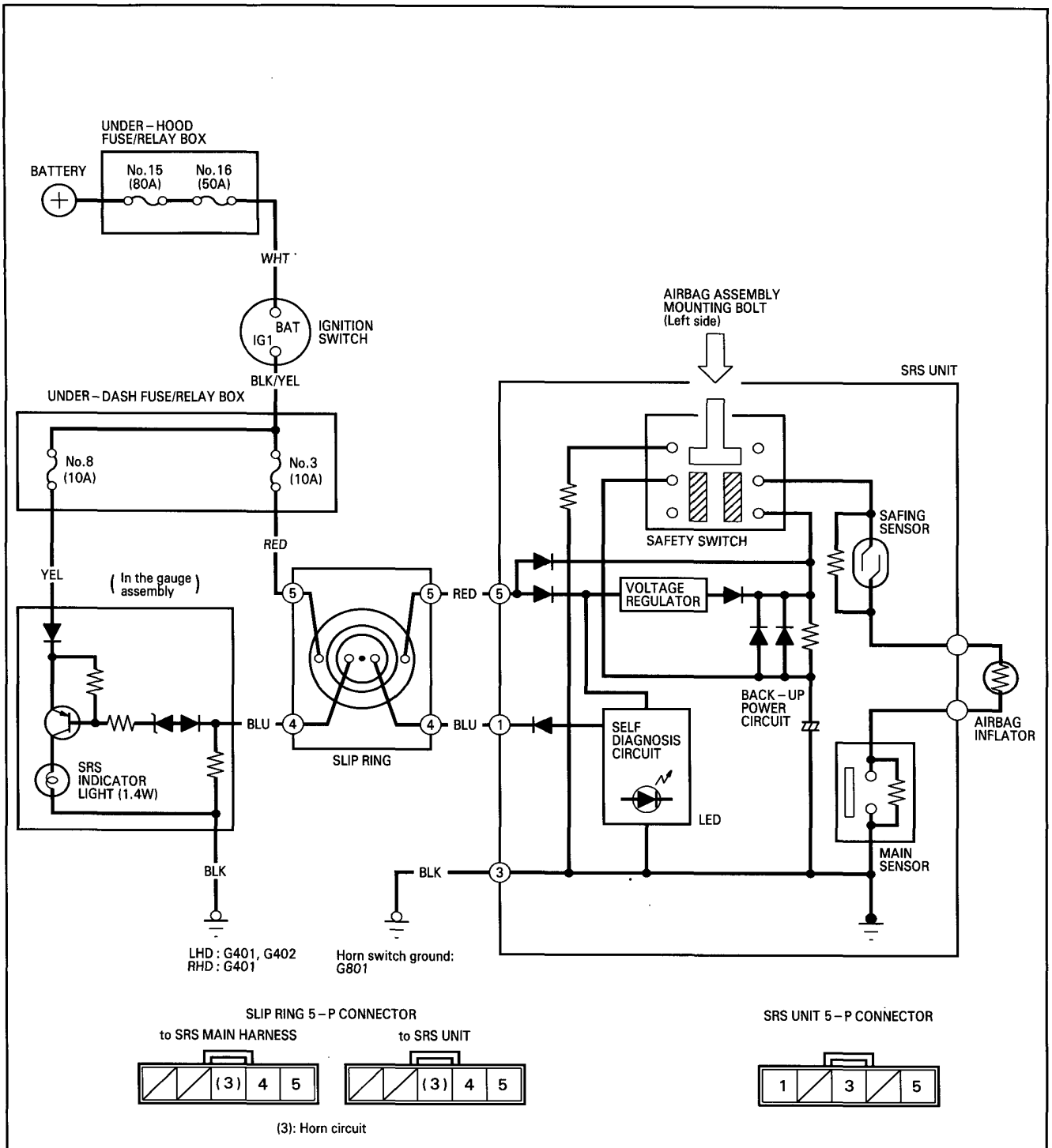

Troubleshooting (SRS-Type II)

Self-diagnosis Procedures

When the ignition switch is turned ON, the SRS indicator light comes on and goes off after about six seconds, and the self-diagnosis indicator (LED) blinks repeatedly in 3 sec intervals, if the system is operating normally, If there is an abnormality in the SRS, the SRS indicator light will stay on while the LED in the SRS unit will indicate the system problem by blinking a diagnostic trouble code (DTC) (see the table on next page).

- If the SRS indicator light does not come on, or does not go off after 6 seconds, or if it comes on while driving, the system must be inspected and repaired as soon as possible.
- To see the indicated DTC, remove the access panel at the left side of the steering wheel.
- If there is a failure in the system, the LED will first blink one time (OK signal), then it will indicate the DTC.
- If simultaneous system problems occur, the LED will indicate only the problem with the higher priority. The problem with the highest priority is that on top of the DTC table, the problem with the lowest priority is that at the bottom of the table (see page 23-59).

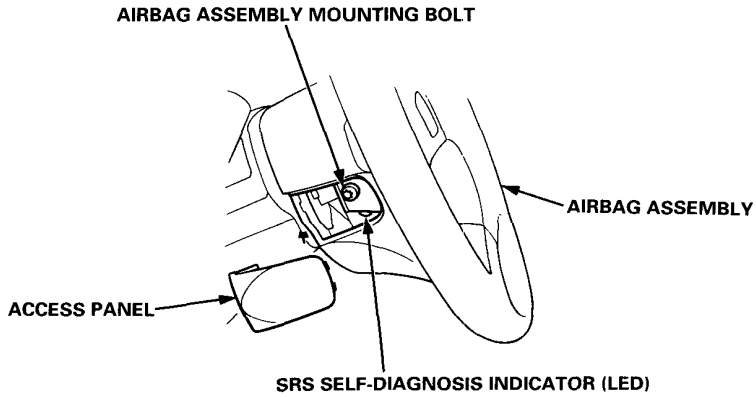

Example of DTC Indications:

1. System is normal: SRS Self-diagnosis Indicator (LED) is

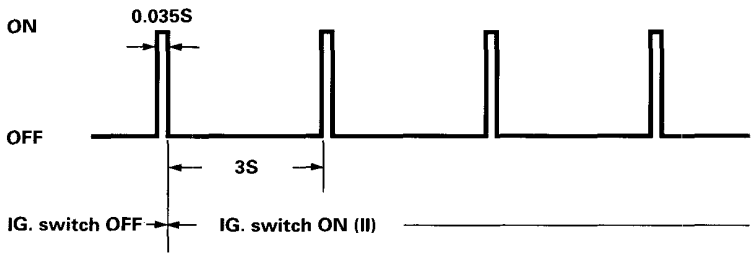

No DTC, system is normal, the LED blinks.

2. System malfunction: SRS Self-diagnosis Indicator (LED) is

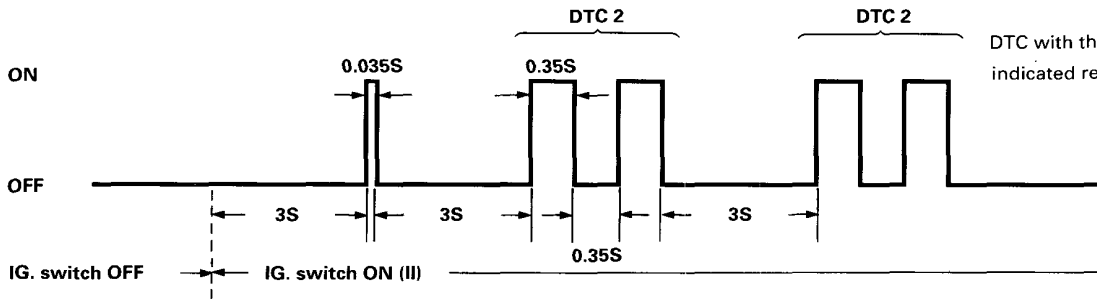

DTC with the highest priority is indicated repeatedly.

Diagnostic Trouble Code (DTC) Chart

Self-diagnosis indicator (LED) blinks	SRS indicator light	Cause
1	Doesn't come on (with the ignition switch turn ON)	• Blown No. 8 (10 A) fuse • Blown SRS indicator light bulb • Poor ground
0	Doesn't go off	• Blown No. 3 (10 A) fuse • Faulty SRS unit • Poor ground
1		• Short (or open) in SRS indicator wire harness
Stays on continuously		• Faulty SRS self-diagnosis circuit
2		• Faulty safety switch
3		• Faulty back-up power circuit
4		• Faulty safety switch
5		• Open in airbag inflator
6		• Open in main sensor • Short in safing sensor
7		• Short in main sensor • Open in safing sensor

Troubleshooting (SRS-Type II)

SRS Indicator Light Wire Connection

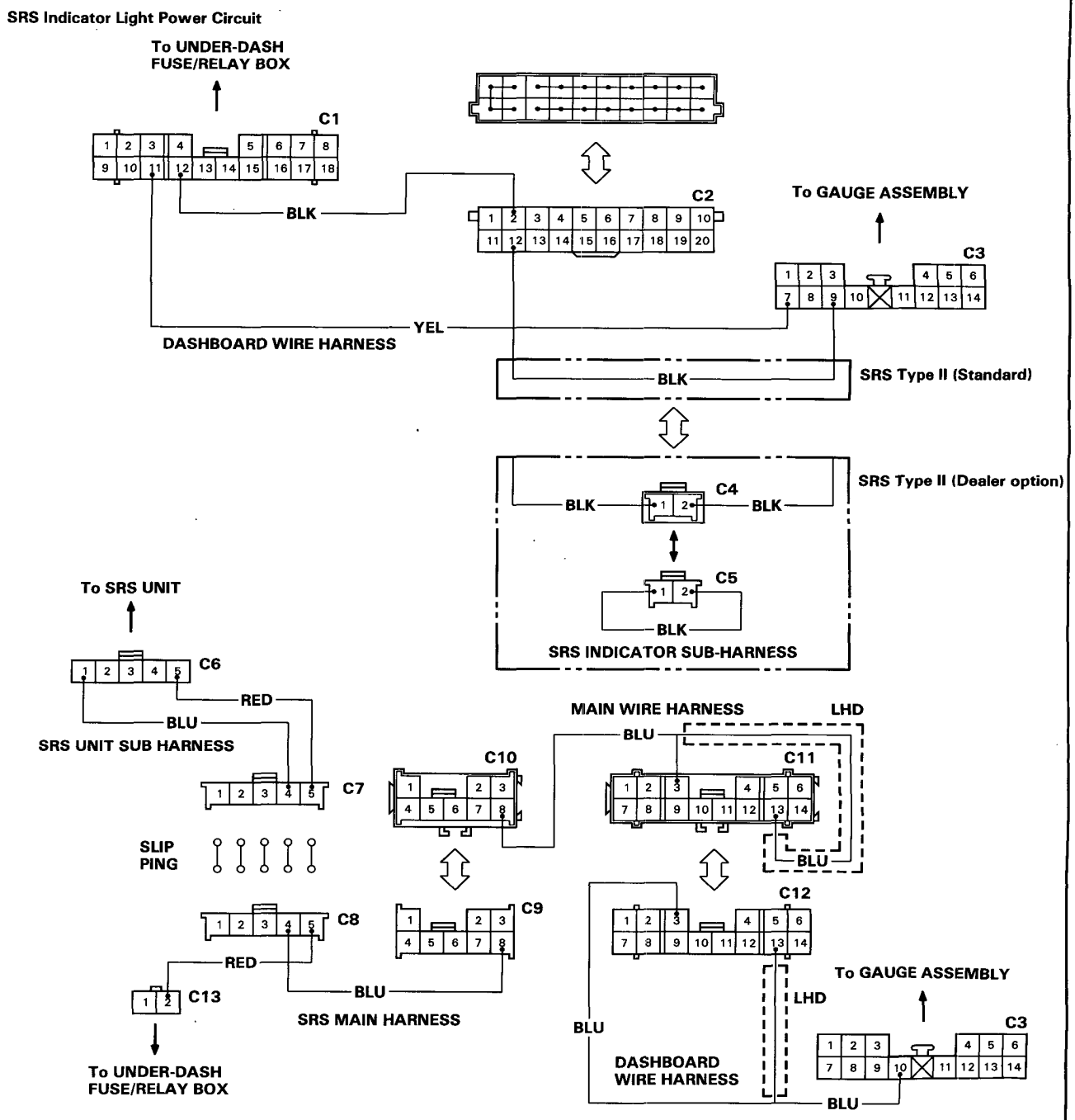

C1: DASHBOARD WIRE HARNESS 18 – P CONNECTOR
C2: JOINT CONNECTOR
C3: DASHBOARD WIRE HARNESS 14 – P CONNECTOR
C4: DASHBOARD WIRE HARNESS 2 – P CONNECTOR
C5: SRS INDICATOR SUB – HARNESS 2 – P CONNECTOR
C6: SRS UNIT SUB HARNESS 5 – P CONNECTOR
C7: SRS UNIT SUB – HARNESS 5 – P CONNECTOR
C8: SRS MAIN HARNESS 5 – P CONNECTOR
C9: SRS MAIN HARNESS 8 – P CONNECTOR
C10: MAIN HARNESS 8 – P CONNECTOR
C11: MAIN HARNESS 14 – P CONNECTOR
C12: DASHBOARD WIRE HARNESS 14 – P CONNECTOR
C13: SRS MAIN HARNESS 2 – P CONNECTOR

The SRS Indicator Does not Light

- The SRS indicator light will not come on until six seconds after the ignition switch has been turned on.
- The LED of the SRS unit should blink one time.

CAUTION: Use only a digital multimeter to check the system. If it's not a Honda multimeter, make sure its output is 10 mA (0.01 A) or less when switched to the smallest value in the ohmmeter range. A tester with a higher output could damage the airbag circuit or cause accidental airbag deployment and possible injury.

Check the SRS indicator light and the No. 8 fuse:
1. Turn the ignition switch ON (II).

Do any other indicator lights (brake system light etc.) come on (in the gauge assembly)?

YES — NO

1. Inspect the No. 8 (10 A) fuse in the under-dash fuse/relay box.

Is No. 8 (10 A) fuse OK?

YES — NO

Replace the fuse.

Repair open in dashboard wire harness between the No. 8 fuse and gauge assembly.

Check the SRS unit and SRS indicator light:
1. Turn the ignition switch OFF.
2. Disconnect the SRS main harness 8-P connector from the main wire harness.
3. Turn the ignition switch ON (II).

Does the SRS indicator light come on?

YES — NO

Check the SRS indicator light bulb and dashboard wire harness:
1. Turn the ignition switch OFF.
2. Remove the gauge assembly, then inspect the SRS indicator light bulb.

Is the SRS indicator light bulb OK?

YES — NO

Replace the indicator light bulb.

Check for short to power in the dashboard wire harness:
1. Turn the ignition switch OFF.
2. Connect a voltmeter between the No. 10 terminal (+) of the dashboard wire harness 14-P connector and body ground.
3. Turn the ignition switch ON (II).
4. Measure the voltage between the No. 10 terminal and body ground.

Is there less than 8.5 V?

YES — NO

Short to power in the BLU wire of the dashboard wire harness. Replace the dashboard wire harness.

A B

To page 23-62

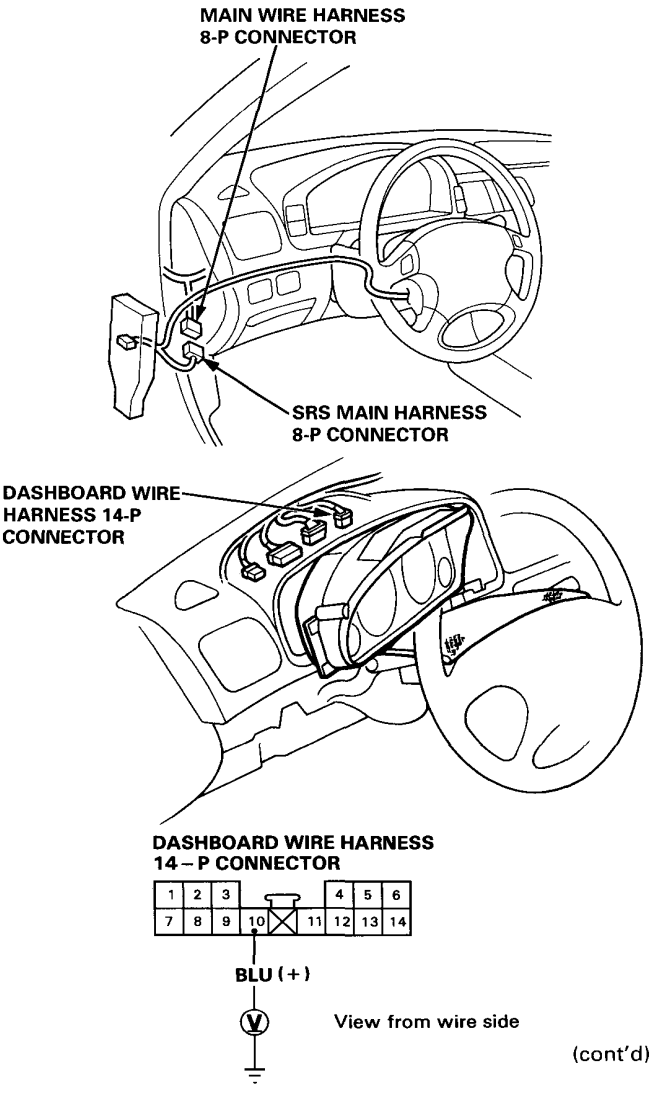

(cont'd)

The SRS indicator Does not Light (cont'd)

From page 23-61

A B

Check for open in the dashboard wire harness, poor ground, or faulty SRS indicator circuit:
1. Turn the ignition switch OFF.
2. Connect a voltmeter between the No. 7 terminal (+) and the No. 9 terminal (–) of the dashboard wire harness 14-P connector.
3. Turn the ignition switch ON (II).
4. Measure the voltage between the No. 7 terminal (+) and the No. 9 terminal (–).

Is there battery voltage?

YES — **The SRS indicator circuit in the gauge assembly is faulty.**

NO — Check for open in the dashboard wire harness or poor ground:
1. Turn the ignition switch OFF.
2. Check for continuity between the No. 9 terminal and body ground.

Does continuity exist?

YES — **Repair open in the BLK wire (No. 9 terminal) between the gauge assembly and body ground [in case of SRS Type II (Standard) replace the SRS indicator sub-harness] or look for a poor ground (G401, G402).**

NO — **Repair open in the YEL wire (No. 7 terminal) of the dashboard wire harness between the gauge assembly and the No. 8 fuse.**

Check the SRS unit and SRS indicator circuit:
1. Turn the ignition switch OFF.
2. Reconnect the SRS main harness 8-P connector to the main wire harness.
3. Disconnect the battery negative cable, then disconnect the positive cable, and wait for three minutes.
4. Remove the airbag assembly from the steering wheel. **CAUTION: Make sure the wheels are aligned straight ahead. Remove the left airbag assembly mounting special bolt first (the safety switch will automatically turn off). Use new special bolts for reinstalling the airbag.**
5. Disconnect the SRS unit sub-harness 5-P connector from the SRS unit (in the airbag assembly).
6. Reconnect the positive and negative battery cables, then turn the ignition switch ON (II).

Does the SRS indicator light come on?

YES — **Short to power in the BLU wire of the SRS unit sub-harness, SRS main harness or the slip ring. Replace faulty component.**

NO — **SRS unit is faulty. Replace the airbag assembly.**

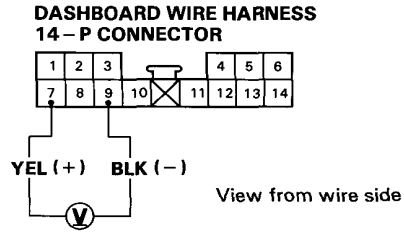

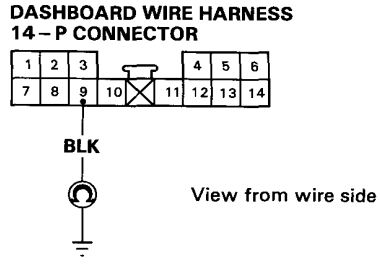

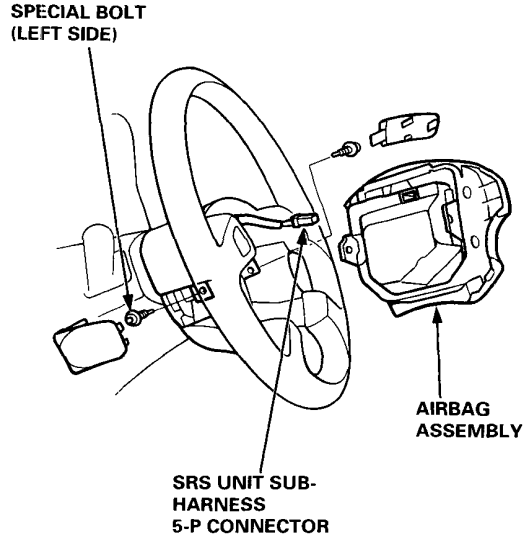

- The LED of the SRS unit does not light.

CAUTION: Disconnect the SRS unit and the 5-P connector before measuring battery voltage. Otherwise, the airbag may inflate.

Check the No. 3 (10 A) fuse:
1. Inspect the No. 3 (10 A) fuse in the under-dash fuse/relay box.

Is No. 3 (10 A) fuse OK?

YES — NO

Replace the fuse.

Check the SRS unit:
1. Disconnect the battery negative cable, then disconnect the positive cable, and wait for three minutes.
2. Remove the airbag assembly from the steering wheel.
   CAUTION: Make sure the wheels are aligned straight ahead. Remove the left airbag assembly mounting special bolt first (the safety switch will automatically turn off). Use new special bolts for reinstalling the airbag.
3. Disconnect the SRS unit sub harness 5-P connector from the SRS unit (in the airbag assembly).
4. Reconnect the battery positive cable, and negative battery cable.
5. Connect a voltmeter between the No. 5 terminal (+) and the No. 3 terminal (–) of the SRS unit sub-harness 5-P connector.
6. Turn the ignition switch ON (II).
7. Measure the voltage between the No. 5 terminal (+) and the No. 3 terminal (–).
   NOTE: Rotate the steering wheel slowly to check that there is good contact to the slip ring.

Is there battery voltage?

YES — NO

SRS unit is faulty. Replace the airbag assembly.

To page 23-64

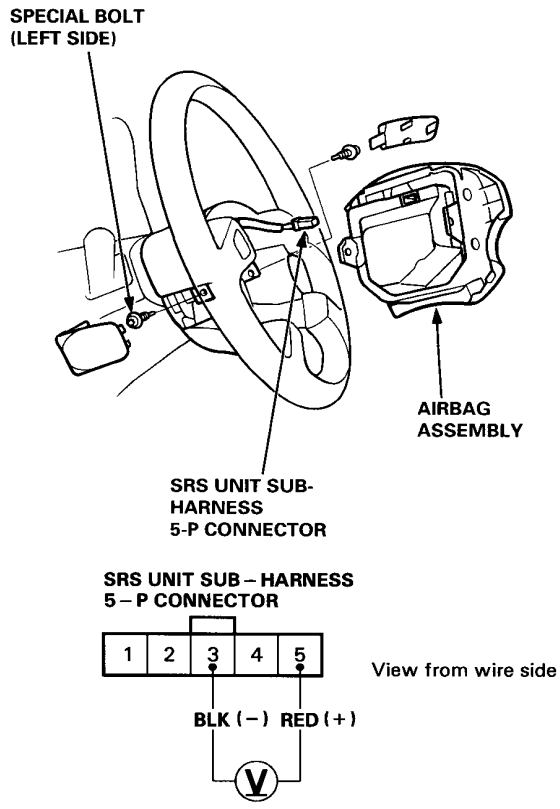

(cont'd)

The SRS indicator Does not Light (cont'd)

From page 23-63

Check for open in the SRS unit sub-harness or poor ground:
1. Turn the ignition switch OFF.
2. Check for continuity between the No. 3 terminal of the SRS unit sub-harness 5-P connector and body ground.

Is there continuity?

YES — NO

Open in the BLK wire (No. 3 terminal) of the SRS unit sub-harness between the SRS unit and body ground or look for a poor ground (G801).

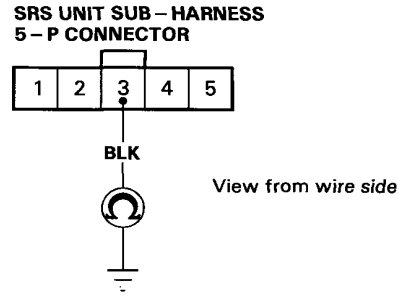

Check for open in the SRS unit sub-harness or slip ring:
1. Disconnect the SRS main harness 5-P connector from the slip ring.
2. Connect a voltmeter between the No. 5 terminal (+) of the SRS main harness 5-P connector and body ground.
3. Turn the ignition switch ON (II).
4. Measure the voltage between the No. 5 terminal (+) and body ground.

Is there battery voltage?

YES — NO

Open in the RED wire of the SRS main harness between the under-dash fuse/relay box and the slip ring. Replace the SRS main harness.

Open in the RED wire of the SRS unit sub-harness or the slip ring. Replace the faulty component.

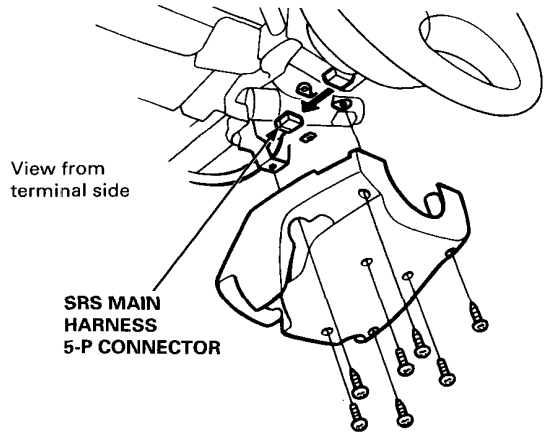

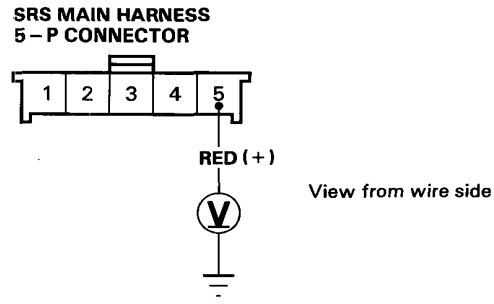

The SRS Indicator Light Stays on Continuously

- The LED of the SRS unit blinks one time.

CAUTION: Disconnect the SRS unit and the 5-P connector before checking continuity. Otherwise, the airbag inflate.

Check the SRS unit and SRS indicator circuit:
1. Turn the ignition switch OFF.
2. Disconnect the SRS main harness 8-P connector from the main wire harness.
3. Connect a voltmeter between the No. 8 terminal (+) of the SRS main harness 8-P connector and body ground.
4. Turn the ignition switch ON (II).
5. Measure the voltage between the No. 8 terminal (+) and body ground for 6 seconds after the ignition switch has been turned ON (II).

Is there more than 8.5 V?

YES — NO

Check for open in the main wire harness or dashboard wire harness:
1. Turn the ignition switch OFF.
2. Remove the gauge assembly.
3. Disconnect the dashboard wire harness 14-P connector from the gauge assembly.
4. Check for continuity between the No. 8 terminal of the main wire harness and the No. 10 terminal of the dashboard wire harness.

Is there continuity?

YES — NO

Open in the BLU wire of the dash-board wire harness or the main wire harness. Replace the faulty component

The SRS indicator circuit in the gauge assembly is faulty. Replace it.

Check for open in the SRS main harness or SRS unit sub-harness:
1. Turn the ignition switch OFF.
2. Disconnect the battery negative cable, then disconnect the positive cable, and wait for three minutes.
3. Remove the airbag assembly from the steering wheel.
   CAUTION: Make sure the wheels are aligned straight ahead. Remove the left airbag assembly mounting special bolt first (the safety switch will automatically turn off). Use new special bolts for reinstalling the airbag.
4. Disconnect the SRS unit sub-harness 5-P connector from the SRS unit (in the airbag assembly).
5. Check for continuity between the No. 8 terminal of the SRS main harness 8-P connector and No. 1 terminal of the SRS unit sub-harness 5-P connector.
   NOTE: Rotate the steering wheel slowly to check that there is good contact to the slip ring.

Is there continuity?

YES — NO

Open in the BLU wire of the SRS main harness, SRS unit sub-harness or the slip ring. Replace the faulty component.

To page 23-66

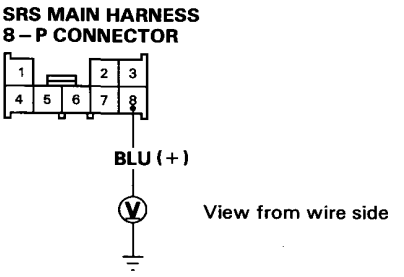

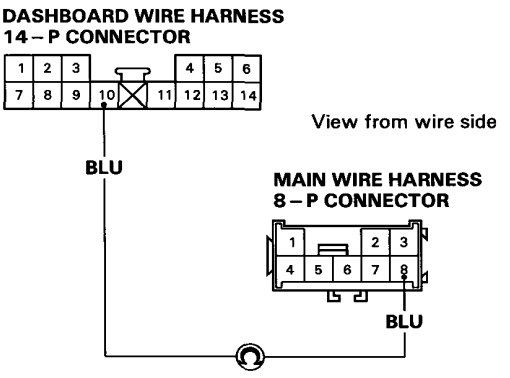

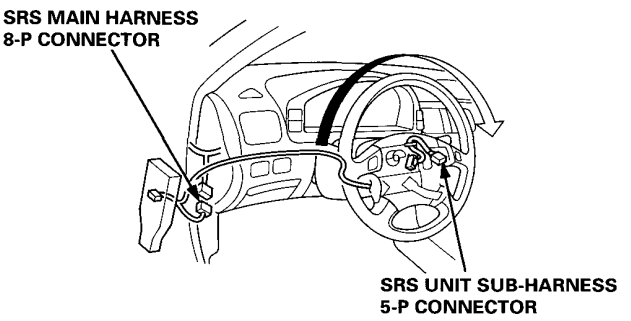

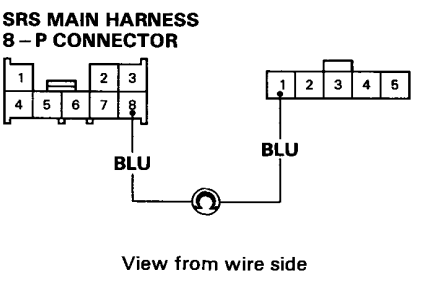

(cont'd)

The SRS Indicator Light Stays on Continuously (cont'd)

From page 23-65

Check for short to ground in the SRS main harness or SRS unit sub-harness, or faulty SRS unit.
1. Check for continuity between the No. 8 terminal of the SRS main harness 8-P connector and body ground.
   NOTE: Rotate the steering wheel slowly to check that there is good contact to the slip ring.

Is there continuity?

YES

SRS unit is faulty. Replace the airbag assembly.

NO

Short to ground in the BLU wire of the SRS main harness, SRS unit sub-harness or slip ring. Replace the faulty component.

SRS MAIN HARNESS 8 – P CONNECTOR

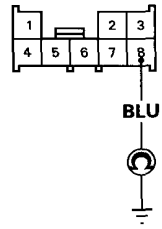

- The LED of the SRS unit doesn't go off or blinks 2, 3, 4, 5, 6 or 7 times.

Replace the airbag assembly.

Supplemental Restraint System (SRS)-Type III

Component/Wiring Location Index 23-68
Description 23-69
Circuit Diagram 23-70
Precautions/Procedures
- General Precautions 23-71
- Airbag Handling and Storage 23-71
- SRS Unit Precautions 23-72
- Inspection After Deployment 23-72
- Wiring Precautions 23-73
- Steering-related Precautions 23-74
- Connecting the Short Connectors ... 23-75

Troubleshooting
- Self-diagnostic Procedures 23-76
- Diagnostic Trouble Code (DTC) Chart 23-77
- SRS Indicator Light Wire Connections 23-80
- Flowcharts 23-81

Airbag Assembly
- Replacement 23-106
- Disposal 23-110

Cable Reel
- Replacement 23-112

SRS Unit
- Replacement 23-116

Component/Wiring Location Index (SRS-TypeIII)

CAUTION: Make sure all SRS ground locations are clean and grounds are securely attached.

NOTE:
- All SRS electrical wiring harnesses are covered with yellow outer insulation.
- Replace the entire affected SRS harness assembly if it has an open circuit or damaged wiring.
- RHD type is symmetrical to LHD type.

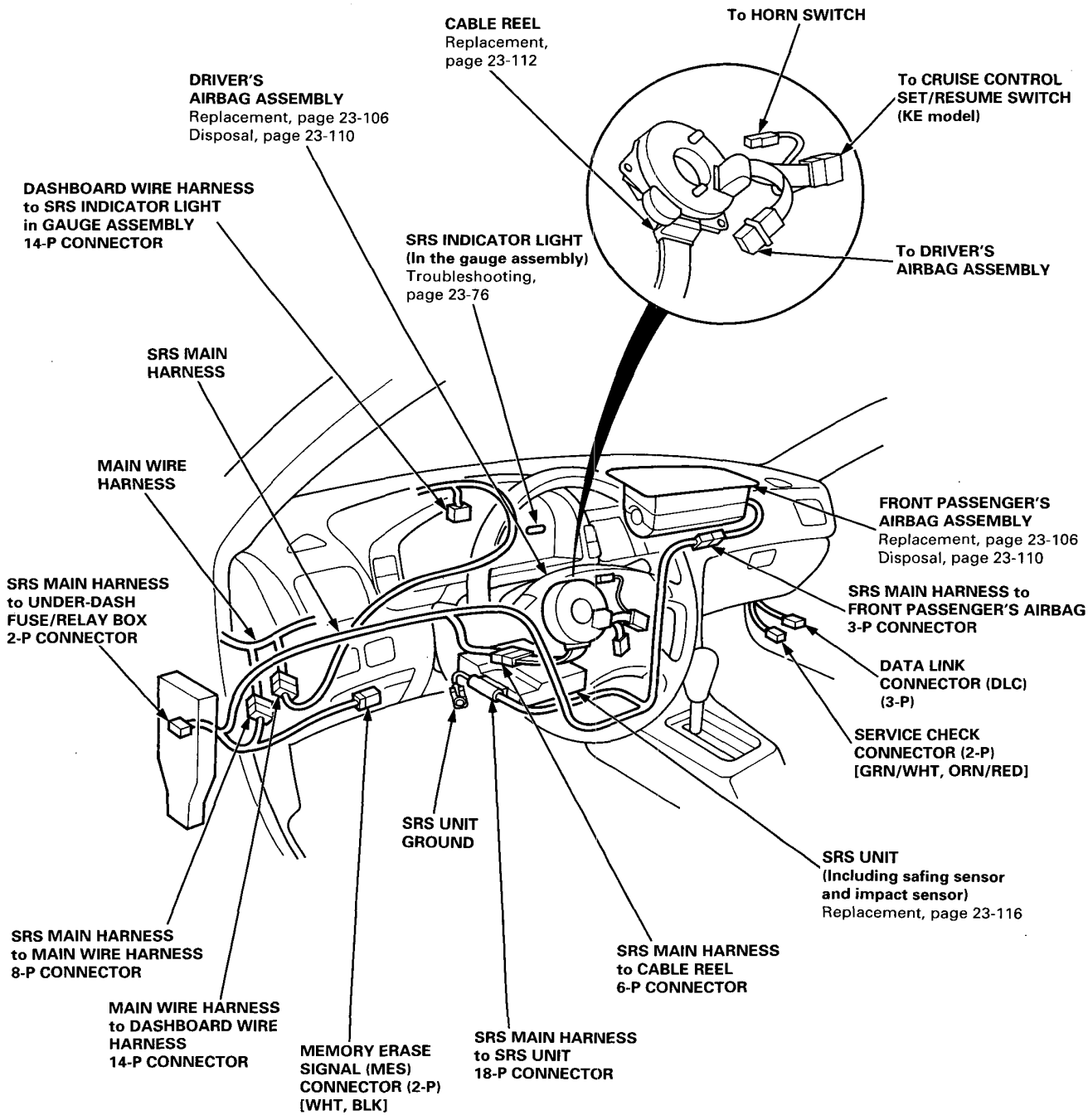

Description (SRS-TypeIII)

The SRS is a safety device which, when used in conjunction with the seat belt, is designed to help protect the driver and front passenger in a frontal impact exceeding a certain set limit. The system consists of the SRS unit (including safing sensor and impact sensor), the cable reel and driver's airbag, and front passenger's airbag.

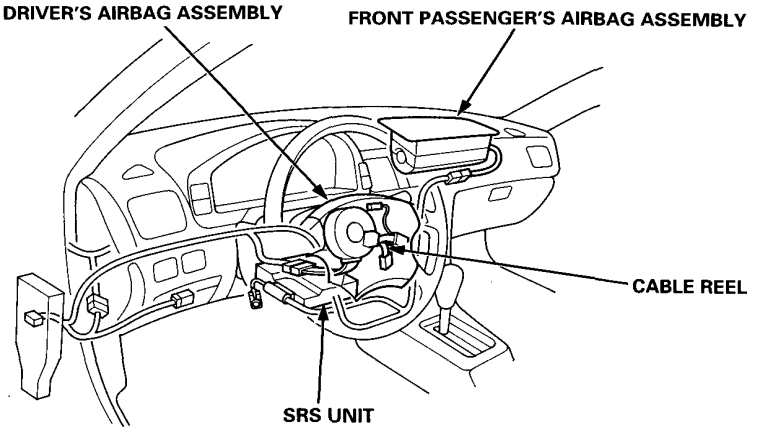

Operation

The main circuit in the SRS unit senses and judges the force of impact and, if necessary, ignites the inflator charges. If battery voltage is too low or power is disconnected due to the impact, the back-up power circuit will keep voltage at a constant level.

For the SRS to operate:

(1) The impact sensor and safing sensor must activate, and send electric signals to the micro processor.
(2) The micro processor must compute the signals, and must send signals to the airbag inflators.
(3) The inflators must ignite and deploy the airbags.

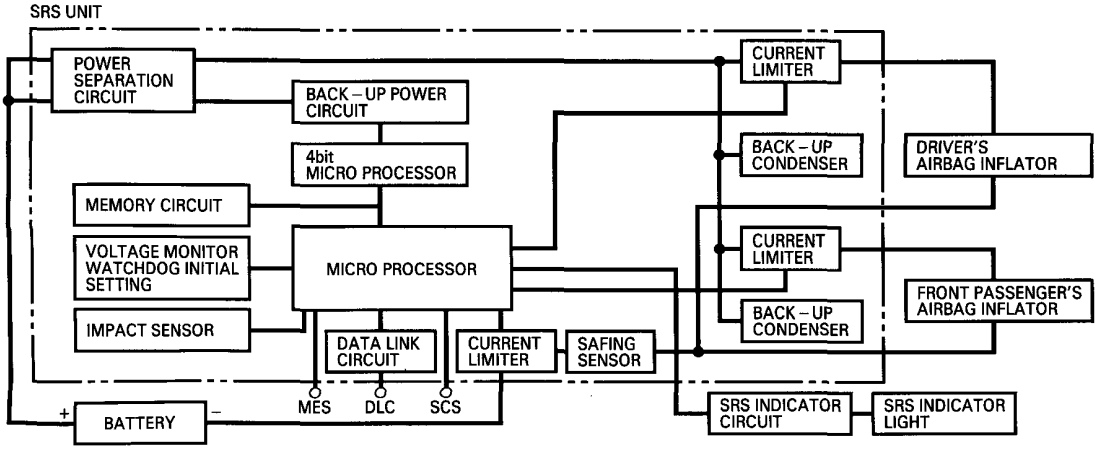

Self-diagnosis System

A self-diagnosis circuit is built into the SRS unit; when the ignition switch is turned ON (II), the SRS indicator light comes on and goes off after about six seconds if the system is operating normally. If the light does not come on, or does not go off after six seconds, or if it comes on while driving, it indicates an abnormality in the system. The system must be inspected and repaired as soon as possible.

For better serviceability, the memory will store the cause of the malfunction, and the data link circuit passes on the information from the memory to the data link connector.

Circuit Diagram (SRS-Type III)

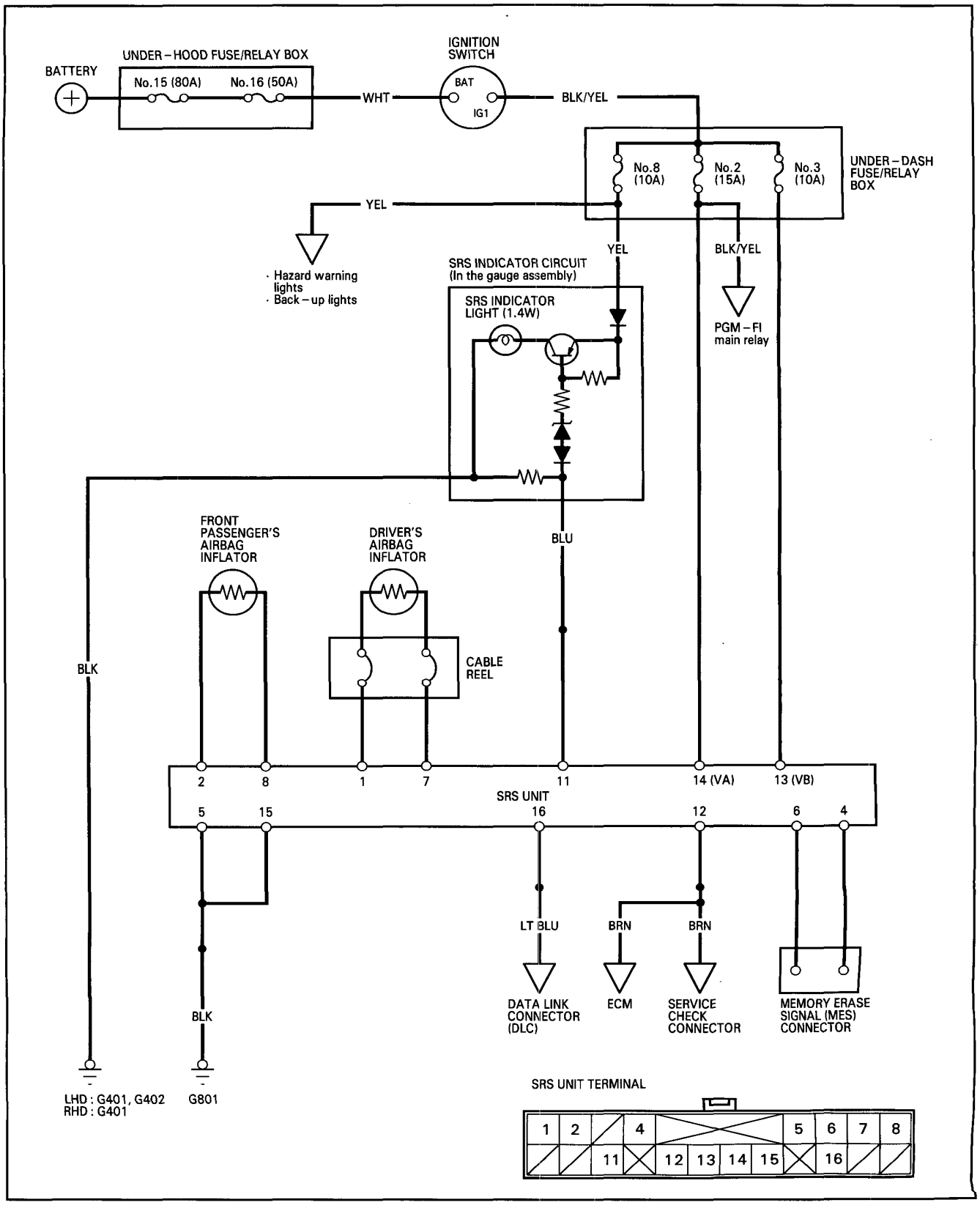

Precautions/Procedures (SRS-Type III)

General Precautions

- Carefully inspect any SRS part before you install it. Do not install any part that shows signs of being dropped or improperly handled, such as dents, cracks or deformation:

  — Airbag assemblies
  — Cable reel
  — SRS unit

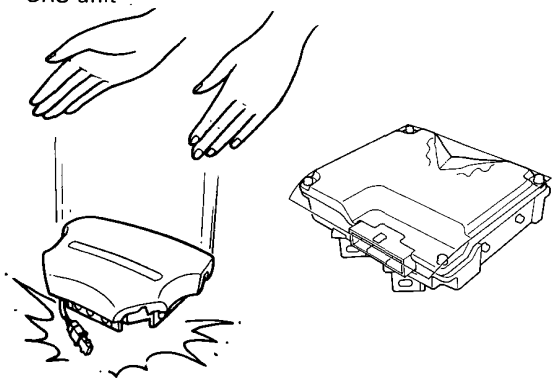

- Use only a digital multimeter to check the system. If it's not a Honda multimeter, make sure its output is 10 mA (0.01 A) or less when switched to the smallest value in the ohmmeter range. A tester with a higher output could damage the airbag circuit or cause accidental deployment and possible injury.

- Do not install used SRS parts from another car. When making SRS repairs, use only new parts.

- Except when performing electrical inspections, always disconnect both the negative cable and positive cable from the battery, and wait at least three minutes before beginning work.

- Replacement of the combination light and wiper/washer switches and cruise control switch can be done without removing the steering wheel:

- Whenever the ignition switch is ON (II), or has been turned OFF for less than three minutes, be careful not to bump the SRS unit; the airbags could accidentally deploy and cause damage or injuries.

- Whenever the airbag has been activated, replace the SRS unit.

Airbag Handling and Storage

Do not try to disassemble the airbag assembly. It has no serviceable parts. Once an airbag has been operated (deployed), it cannot be repaired or reused.

For temporary storage of the airbag assembly during service, please observe the following precautions:

- Store the removed airbag assembly with the pad surface up.

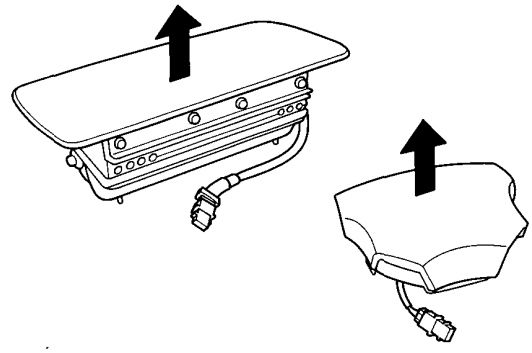

⚠ WARNING If the airbag is improperly stored face down, accidental deployment could propel the unit with enough force to cause serious injury.

- Store the removed airbag assembly on a secure flat surface away from any high heat source (exceeding 100°C/212°F) and free of any oil, grease, detergent or water.

CAUTION: Improper handling or storage can internally damage the airbag assembly, making it inoperative.
If you suspect the airbag assembly has been damaged, install a new unit and refer to the Deployment/Disposal Procedures for disposing of the damaged airbag.

Precautions/Procedures (SRS-Type III)

SRS Unit Precautions

- Take extra care when painting or doing body work in the area below the dashboard. Avoid direct exposure of the SRS unit or wiring to heat guns, welding or spraying equipment.
- Connect the short connectors before working below the dashboard near the SRS unit.
- After any degree of frontal body damage, or after a collision without airbag deployment, inspect the SRS unit for physical damage. If it is dented, cracked, or deformed, replace it.

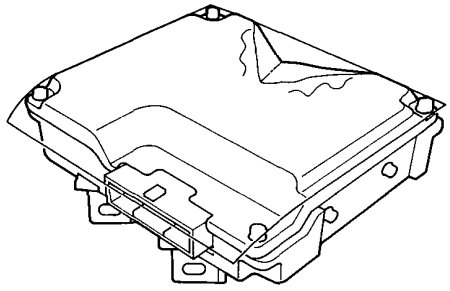

- Be sure the SRS unit is installed securely.
- During installation or replacement, be careful not to bump (impact wrench, hammer, etc.) the area around the SRS unit. The airbags could accidentally deploy and cause damage or injuries.

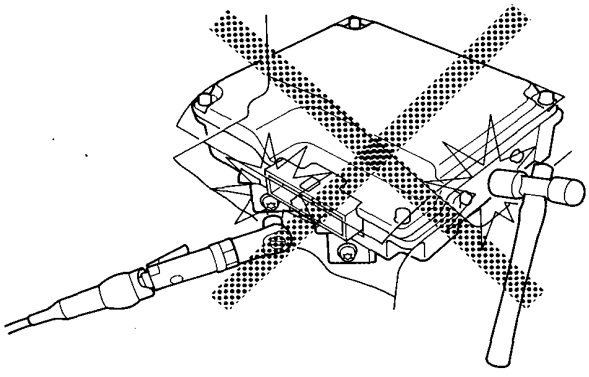

- Do not disassemble the SRS unit.
- Store the SRS unit in a cool (less than about 40°C) and dry (less than 80% humidity no moisture) place. Do not spill water or oil on the SRS unit, and keep it from dust.

Inspection After Deployment

After a collision in which the airbags were deployed, replace the SRS unit and inspect the following:

1. Inspect all the SRS wire harnesses. Replace, don't repair, any damaged harnesses.
2. Inspect the cable reel for heat damage. If there is any damage, replace the cable reel.
3. After the car is completely repaired, turn the ignition switch on. If the SRS indicator light comes on for about six seconds and then goes off, the SRS system is OK. If the indicator light does not function properly, go to SRS Troubleshooting.

Wiring Precautions

- Never attempt to modify, splice or repair SRS wiring.

  NOTE: SRS wiring can be identified by special yellow outer protective covering.

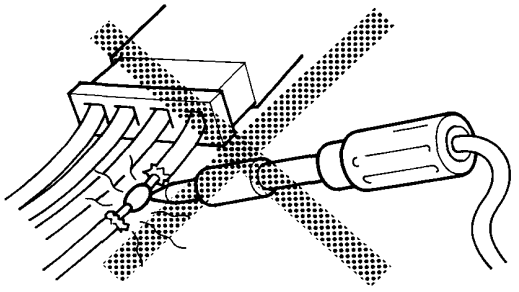

- Be sure to install the harness wires so that they are not pinched or interfering with other car parts.

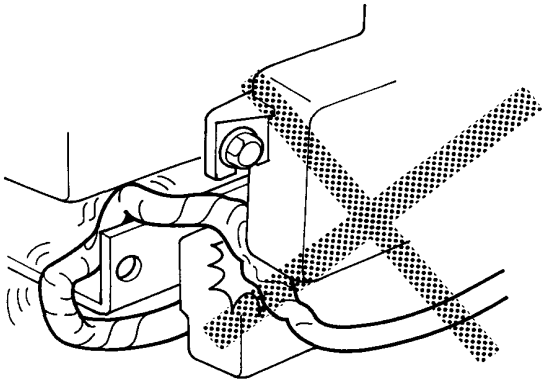

- Make sure all SRS ground locations are clean and grounds are securely fastened for optimum metal-to-metal contact. Poor grounding can cause intermittent problems that are difficult to diagnose.

Disconnecting the SRS Connector at the Under-dash Fuse/Relay Box:

CAUTION: Avoid breaking the connector; it's double-locked.

1. First lift the connector lid with a thin screwdriver, then press the connector tab down and pull the connector out.

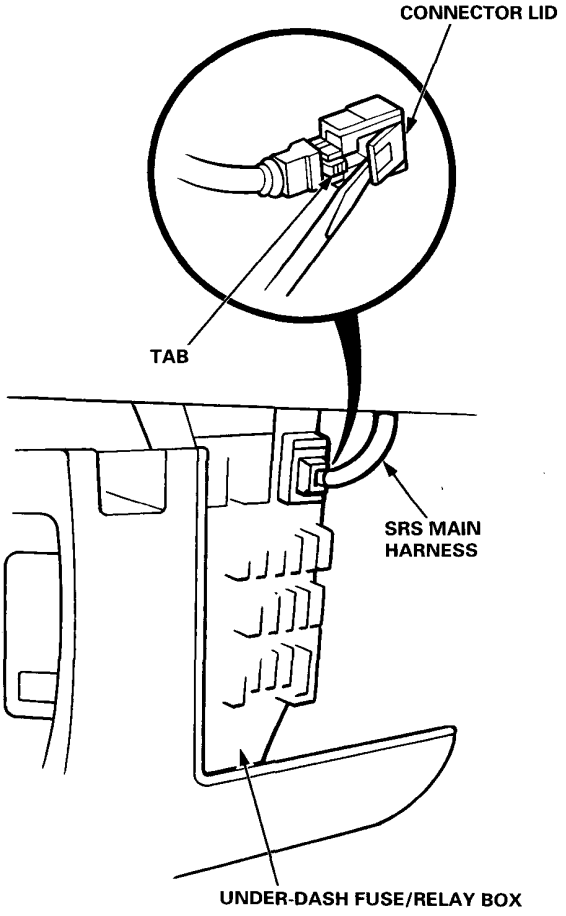

2. To reinstall the connector, push it into position until it clicks, then close its lid.

Steering-related Precautions

Steering Wheel and Cable Reel Alignment

NOTE: To avoid misalignment of the steering wheel or airbag on reassembly, make sure the wheels are turned straight ahead before removing the steering wheel.

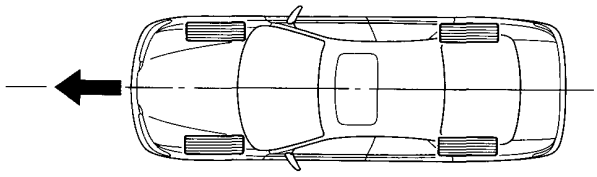

Rotate the cable reel clockwise unit it stops.
Then rotate it counterclockwise (approximately two turns) until

— the yellow gear tooth lines up with the alignment mark on the cover.
— the arrow mark on the cable reel label points straight up.

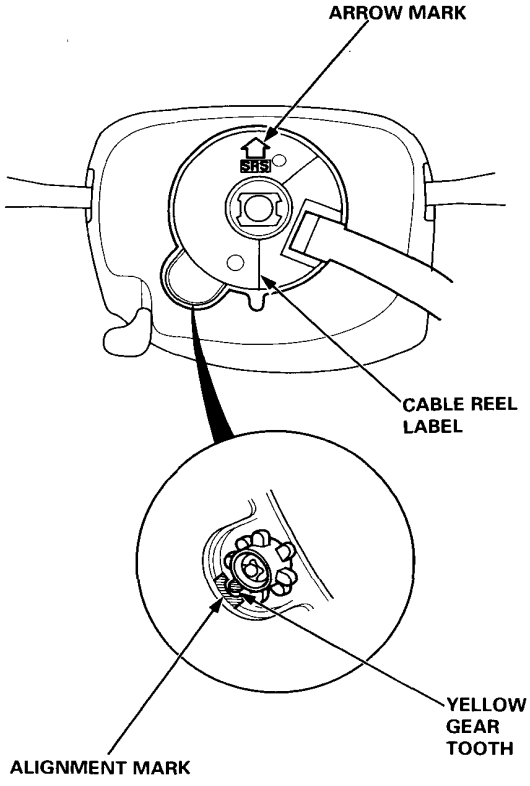

Steering Column Removal

CAUTION:

- **Before removing the steering column, first disconnect the connector between the cable reel and the SRS main harness.**
- **If the steering column is going to be removed without dismounting the steering wheel, lock the steering by turning the ignition key to 0-LOCK position, or remove the key from the ignition so that the steering wheel will not turn.**

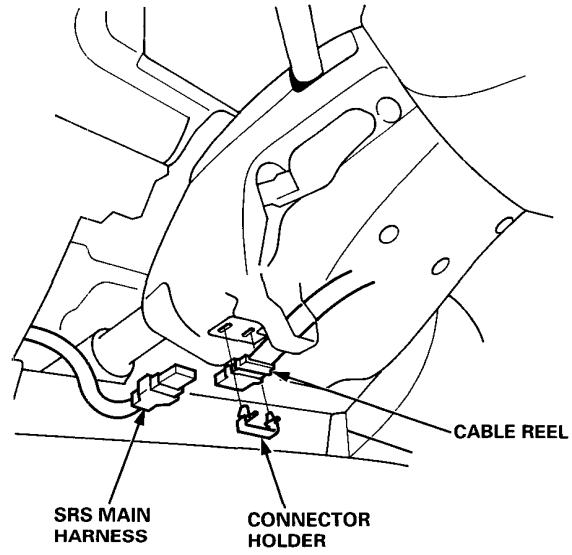

Do not replace the original steering wheel with any other design, since it will make it impossible to properly install the airbag (only use genuine Honda replacement parts).

After reassembly, confirm that the wheels are still turned straight ahead and that the steering wheel spoke angle is correct. If minor spoke angle adjustment is necessary, do so only by adjustment of the tie-rods, not by removing and repositioning the steering wheel.

Connecting the Short Connectors

⚠ WARNING To avoid accidental deployment and possible injury, always connect the protective short connectors on the driver's and passenger's airbag connectors before working near any SRS wiring.

1. Disconnect the battery negative cable, then disconnect the positive cable, and wait at least three minutes.

2. Connect the short connectors (RED):

Driver's Side:

- Remove the access panel from the steering wheel, then remove the short connector (RED) from the panel.

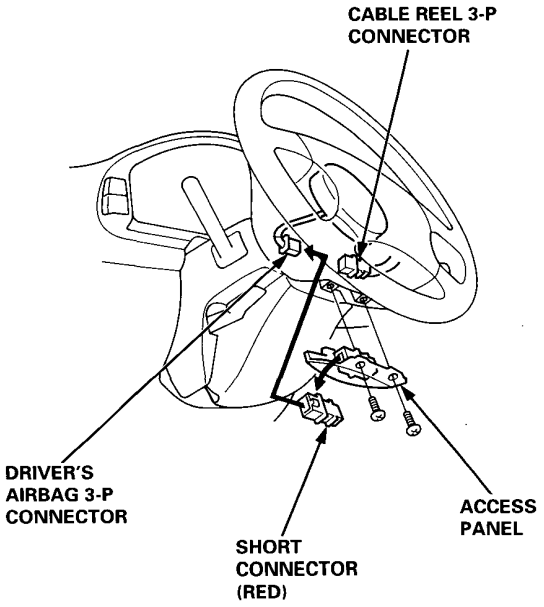

- Disconnect the 3-P connector between the driver's airbag and cable reel, then connect the short connector (RED) to the airbag side of the connector.

Front Passenger's Side:

- Remove the glove box, then remove the short connector (RED) from its holder.

- Disconnect the 3-P connector between the front passenger's airbag and SRS main harness, then connect the short connector (RED) to the airbag side of the connector.

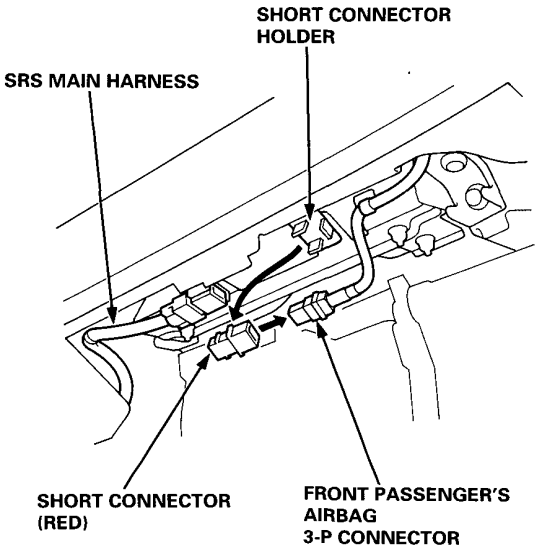

Self-diagnostic Procedures

The self-diagnostic function of the SRS system allows it to locate the causes of system problems and to store this information in memory. For easier troubleshooting, this data can be retrieved via the data link circuit.

- When you turn the ignition switch ON (II), the SRS indicator will come on. If it goes off after six seconds, the system is normal.
- If there is an abnormality, the system locates and defines the problem, and stores this information in memory while the SRS indicator light turns on.
  NOTE: The data will remain in the memory even when the ignition switch is turned off, or if the battery is disconnected.
- When you connect the SCS short connector to the service check connector (2-P), and turn the ignition switch ON (II), the SRS indicator light will indicate the diagnostic trouble code (DTC) by the number of blinks.
- After reading and recording the DTC, proceed with the troubleshooting for this code.

Precautions

- Use only a digital multimeter to check the system. If it's not a Honda multimeter, make sure its output is 10 mA (0.01 A) or less when switched to the smallest value in the ohmmeter range. A tester with a higher output could damage the airbag circuit or cause accidental airbag deployment and possible injury.
- Whenever the ignition switch is ON (II), be careful not to bump the SRS unit; the airbags could accidentally deploy and cause damage or injuries.
- Before you remove the SRS main harness, connect the short connectors (RED) to the airbag connectors.
- Do not touch a tester probe to the terminals in the SRS unit or harness connectors, and do not connect the terminals with a jumper wire. Use only the test harness and the SCS short connectors.
- Make sure the battery is sufficiently charged. If the battery is dead or low, or the back-up power circuit in the SRS unit is faulty, measuring values won't be correct.

Diagnostic Trouble Code (DTC)

The SRS indicator light indicates the DTC by the number of blinks when the SCS short connector is connected to the service check connector.

1. With the ignition switch OFF, connect the SCS short connector to the service check connector.

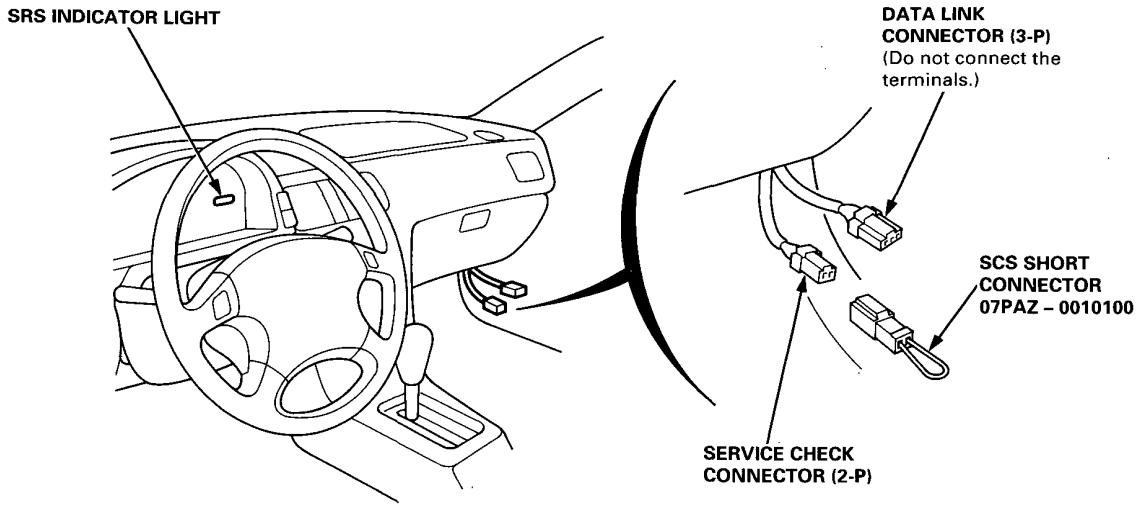

2. Turn the ignition switch ON (II). The SRS indicator light comes on for about six seconds and goes off. Then it will indicate the DTC:
   — The DTC consists of a main code and a sub-code.
   — Including the most recent problem, up to three different malfunctions can be indicated.
   — In case of a continuous failure, the DTC will be indicated repeatedly (see example 1. below).
   — In case of an intermittent failure, the SRS indicator light will indicate the DTC one time, then it will stay on (see example 2. below).
   — If both a continuous and an intermittent failure occur, both DTCs will be indicated as continuous failures.
   — In case the system is normal (no DTC), the SRS indicator light will start blinking continuous short blinks (see example 3. below).

Example of DTC Indications:

1. Continuous failure: SRS Indicator Light is

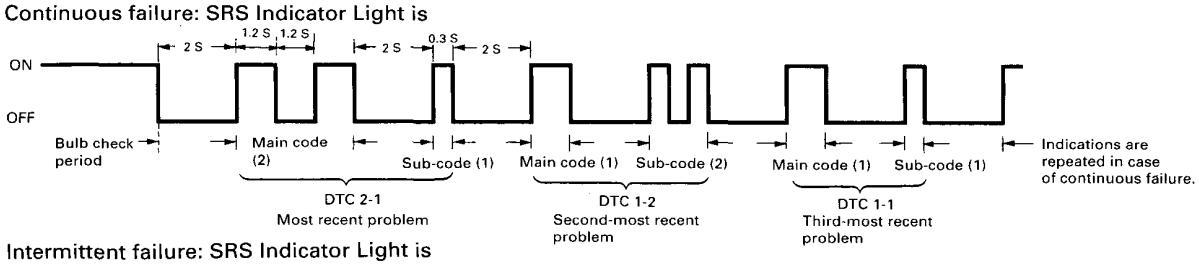

2. Intermittent failure: SRS Indicator Light is

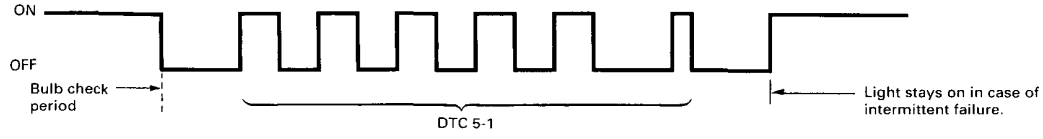

3. Normal (no failure): SRS Indicator Light is

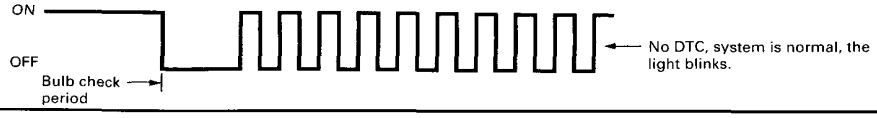

Troubleshooting of Intermittent Failures

If there was a malfunction, but it doesn't recur, it will be stored in the memory as an intermittent failure, and the SRS indicator light comes on.

After checking the DTC, troubleshoot as follows:

1. Record the DTC.
2. Remove the SCS short connector from the service check connector.
3. Erase the DTC memory (see "Erasing the DTC Memory").
4. With the shift lever in neutral, turn the ignition switch ON (II), and let the engine idle.
5. Connect the SCS short connector to the service check connector. The SRS indicator light will blink continuous short blinks.

6. Shake the wire harness and the connector, and/or take a test drive (quick acceleration, quick braking, *cornering*) to find the cause of the intermittent failure. If the problem recurs, the SRS indicator light will stop blinking and stay on.

7. If you can't duplicate the intermittent failure, the system is OK at this time. Disconnect the SCS short connector.

Erasing the DTC Memory

NOTE: Use only the SCS short connector. Otherwise, you may not erase the memory because it is akward to connect and disconnect a jumper wire quickly enough.

1. Turn the ignition switch OFF, and disconnect the SCS short connector from the service check connector.
2. Connect the SCS short connector to the MES connector.
3. Turn the ignition switch ON (II).
4. The SRS indicator light comes on for about six seconds and goes off. Remove the SCS short connector from the MES connector within four seconds after the SRS indicator light went off.
5. The SRS indicator light comes on again. Reconnect the SCS short connector to the MES connector within four seconds after the SRS indicator comes on.
6. The SRS indicator light goes off. Remove the SCS short connector from the MES connector within four seconds.
7. The SRS indicator light indicates that the memory is erased by blinking two times.

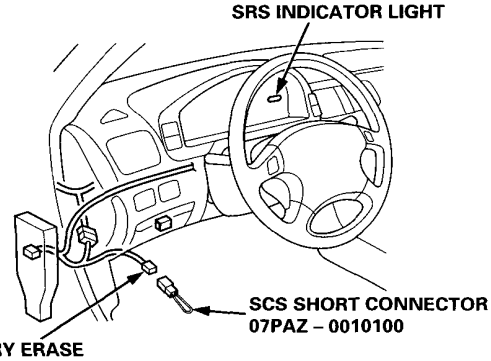

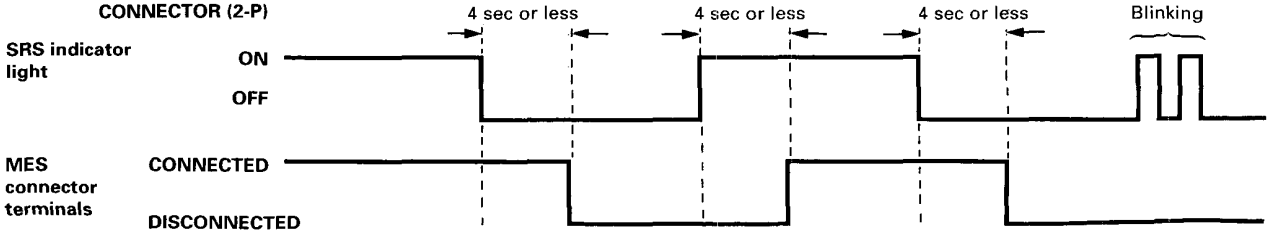

Diagnostic Trouble Code (DTC) Chart

SRS indicator light	DTC	Possible cause	Corrective action	See page
doesn't come on	none	Faulty SRS indicator light circuit	Troubleshooting	23-81
comes on	1-1	Open in the driver's airbag inflator or increased resistance	Troubleshooting	23-84
	1-2	Short to another wire in the driver's airbag inflator or decreased resistance		23-86
	1-3	Short to power in the driver's airbag inflator		23-88
	1-4	Short to ground in the driver's airbag inflator		23-90
	2-1	Open in the passenger's airbag inflator or increased resistance	Troubleshooting	23-93
	2-2	Short to another wire in the passenger's airbag inflator or decreased resistance		23-95
	2-3	Short to power in the passenger's airbag inflator		23-97
	2-4	Short to ground in the passenger's airbag inflator		23-98
	5-1	Internal failure of the SRS unit	Troubleshooting or SRS unit replacement	23-116
	10-1	SRS unit replacement code (SRS unit must not be used any longer)	SRS unit replacement	
	9-1 none	Faulty SRS indicator light circuit	Troubleshooting	23-100
	9-2	Faulty SRS power supply system		23-104

NOTE:
- If multiple DTCs including DTC 5-1 are indicated, first troubleshoot all DTCs except DTC 5-1, then erase the memory, and recheck the DTC indication. If DTC 5-1 doesn't reappear, it is not necessary to replace the SRS unit.
- When you return the SRS unit in case of a claim, do not erase the memory. The data will remain in the memory even when the ignition switch is turned off.
- If an intermittent failure occurs, DTC 9-1 will be indicated. In case of a continuous problem, there will be no DTC.

SRS Indicator Light Wire Connections

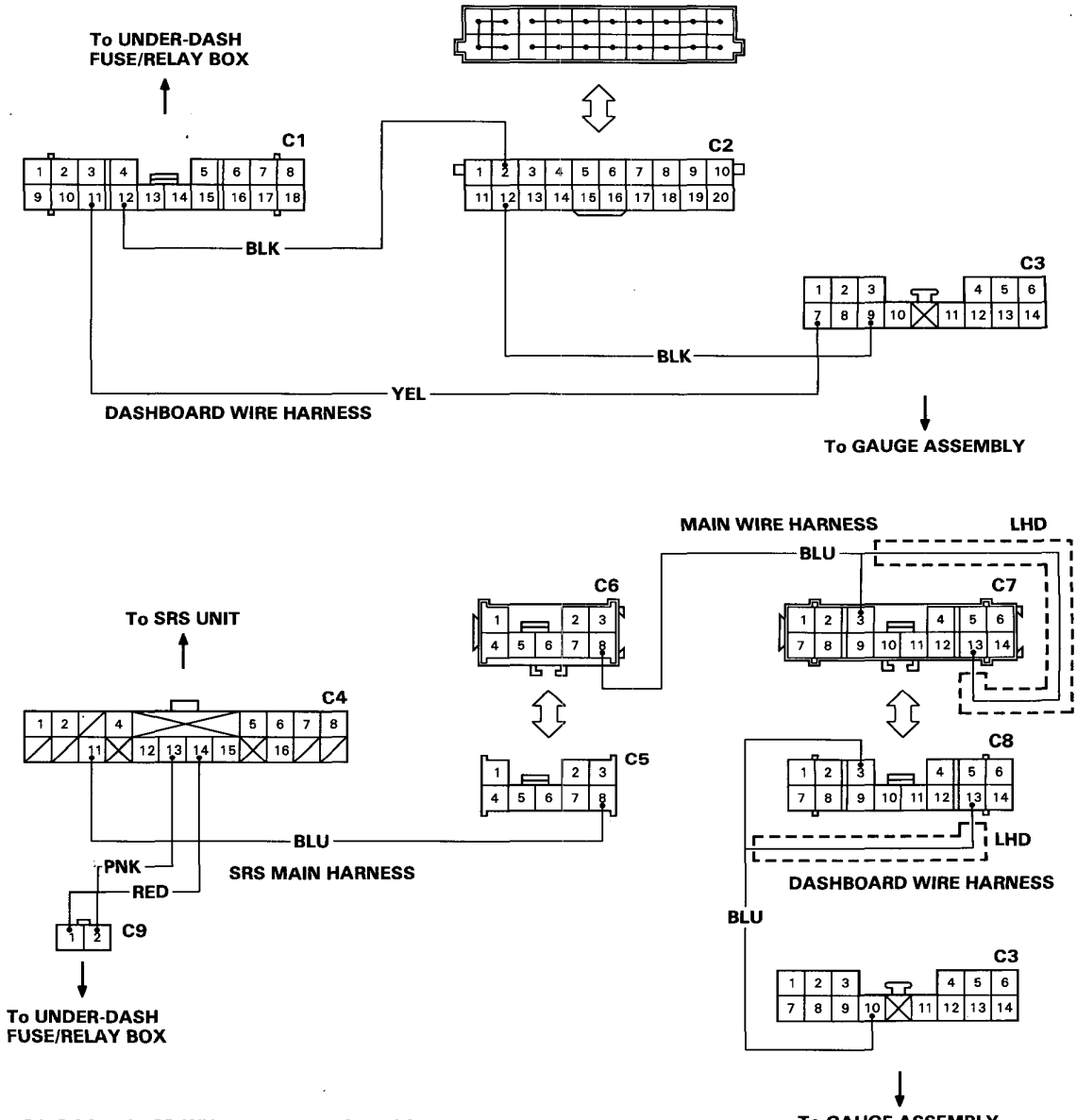

C1: DASHBOARD WIRE HARNESS 18 – P CONNECTOR
C2: JOINT CONNECTOR
C3: DASHBOARD WIRE HARNESS 14 – P CONNECTOR
C4: SRS MAIN HARNESS 18 – P CONNECTOR
C5: SRS MAIN HARNESS 8 – P CONNECTOR
C6: MAIN WIRE HARNESS 8 – P CONNECTOR
C7: MAIN WIRE HARNESS 14 – P CONNECTOR
C8: DASHBOARD WIRE HARNESS 14 – P CONNECTOR
C9: SRS MAIN HARNESS 2 – P CONNECTOR

The SRS Indicator Light Doesn't Come On

CAUTION: Whenever the ignition switch is ON (II), or has been turned OFF for less than three minutes, be careful not to bump the SRS unit; the airbags could accidentally deploy and cause damage or injuries.

Check the power supply (fuse):
Turn the ignition switch ON (II), and check whether the other indicator lights come on or not (brake system light, etc.).

Do the other indicator lights come on?

YES — NO

Check the No. 8 (10 A) fuse in the under-dash fuse/relay box.

Is the fuse OK?

YES — NO

Replace the No. 8 (10 A) fuse, and check that the SRS indicator light comes on.

Does the SRS indicator light come on?

YES — NO

END

Check for an open in the wire harness between fuse No. 8 (10 A) and the gauge assembly, and repair. Check that the SRS indicator light comes on.

Does the SRS indicator light come on?

YES — NO

END

Check the SRS unit:
1. Turn the ignition switch OFF.
2. Disconnect the battery negative cable, then the positive cable, and wait for three minutes.
3. Connect the short connectors (RED) to the airbag connectors (see page 23-75).
4. Disconnect the SRS main harness 18-P connector from the SRS unit.
5. Reconnect the battery positive cable, then the negative cable.
6. Turn the ignition switch ON (II), and check that the SRS indicator light comes on.

Does the SRS indicator light come on?

YES — NO

Faulty SRS unit; replace the unit.

To page 23-82

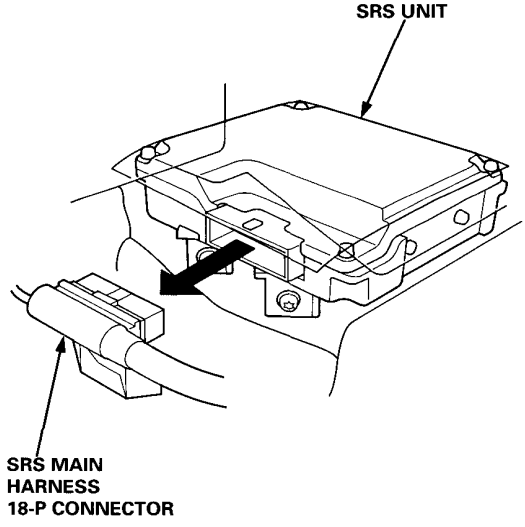

(cont'd)

The SRS Indicator Light Doesn't Come On (cont'd)

From page 23-81

Check the SRS indicator circuit input voltage:
1. Turn the ignition switch OFF.
2. Connect Test Harness B between the SRS unit and the SRS main harness 18-P connector.
3. Connect jumper wires, as shown, to the No. 13, 14, 15, and 16 terminals on rows A (SRS unit end) and B (SRS main harness end) of Test Harness B.
   NOTE: Be careful not to connect the jumper wires to other terminals.
4. Connect a voltmeter between terminals A11 (+) and A5 (–).
5. Turn the ignition switch ON (II), and measure voltage.

Is there 8.5 V or less for six seconds after the ignition switch has been turned ON (II)?

YES — NO

Faulty SRS unit; replace the SRS unit.

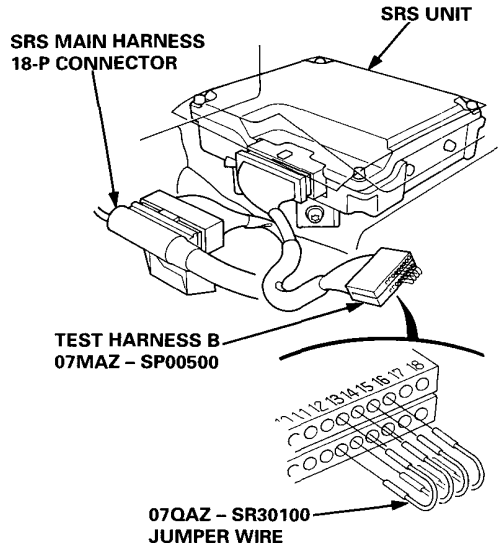

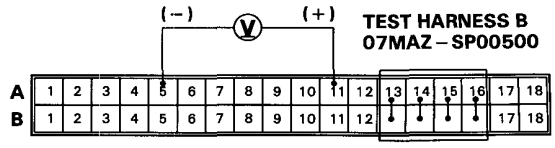

Check the SRS indicator light bulb:
1. Turn the ignition switch OFF, and disconnect Test Harness B.
2. Connect the SRS main harness 18-P connector to the SRS unit.
3. Remove the gauge assembly.
4. Check for blown SRS indicator light bulb.

Is the SRS indicator light bulb OK?

YES — NO

Replace the bulb, and reconnect the gauge assembly connectors. Then turn the ignition switch ON (II).

Does the SRS indicator light come on?

YES — NO

END

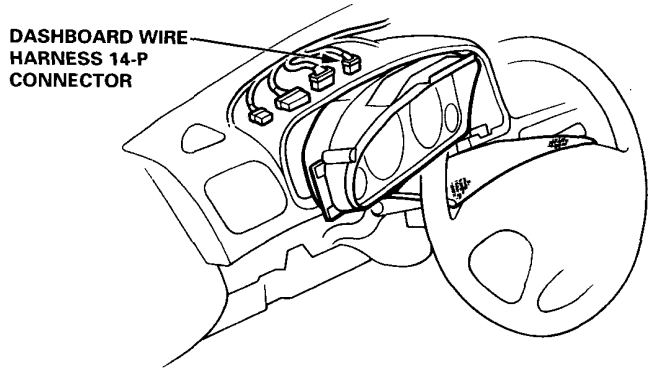

Check the SRS indicator light circuit:
1. Disconnect the dashboard wire harness 14-P connector from the gauge assembly.
2. Connect a voltmeter between the No. 10 terminal (+) of the 14-P connector and ground.
3. Turn the ignition switch ON (II), and measure voltage.

Is there 8.5 V or less for six seconds after the ignition switch has been turned ON (II)?

YES — NO

Faulty SRS indicator light circuit in the gauge assembly; replace the gauge assembly.

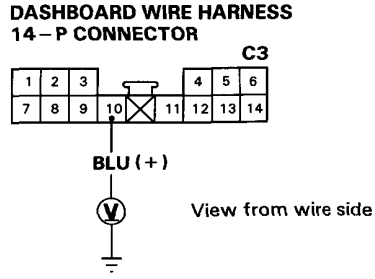

To page 23-83

From page 23-82

Check the wire harness of the SRS indicator light circuit (1):
1. Turn the ignition switch OFF.
2. Disconnect the dashboard wire harness 14-P connector from the main wire harness.
3. Connect a voltmeter between the No. 13 (LHD) or No. 3 (RHD) terminal (+) of the main wire harness 14-P connector and ground.
4. Turn the ignition switch ON (II), and measure voltage.

Is there 8.5 V or less for six seconds after the ignition switch has been turned ON?

YES

Short to power in the BLU wire of the dashboard wire harness; replace the harness.

NO

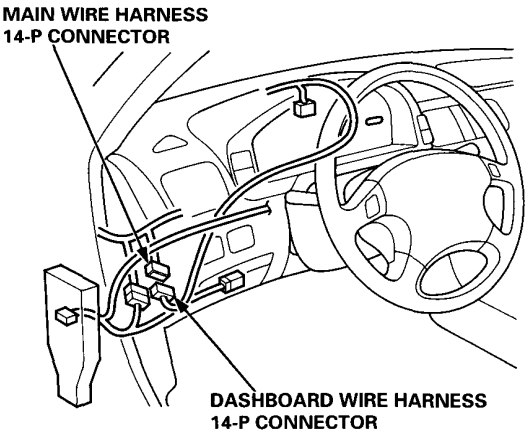

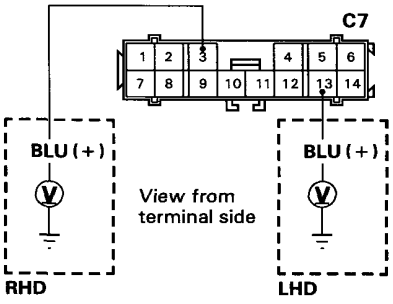

Check the wire harness of the SRS indicator light circuit (2):
1. Turn the ignition switch OFF.
2. Disconnect the SRS main harness 8-P connector from the main wire harness.
3. Connect a voltmeter between the No. 8 terminal (+) of the SRS main harness 8-P connector and ground.
4. Turn the ignition switch ON (II), and measure voltage.

Is there 8.5 V or less for six seconds after the ignition switch has been turned ON (II)?

YES

Short to power in the BLU wire of the main wire harness; replace the harness.

NO

Short to power in the BLU wire of the SRS main harness; replace the harness.

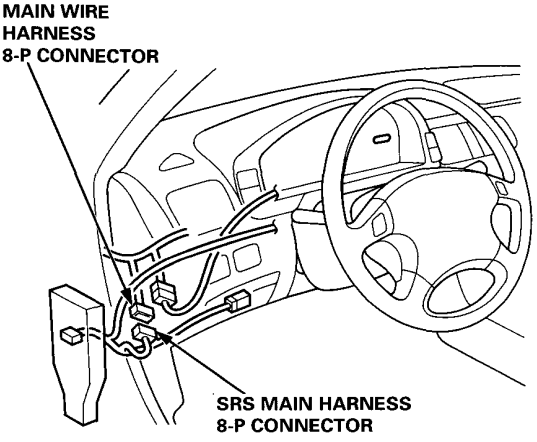

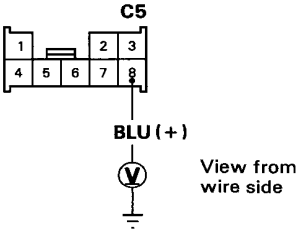

DTC 1-1

CAUTION: Whenever the ignition switch is ON (II), or has been turned OFF for less than three minutes, be careful not to bump the SRS unit; the airbags could accidentally deploy and cause damage or injuries.

Check for an open in the driver's airbag inflator:
1. Turn the ignition switch OFF.
2. Disconnect the battery negative cable, then disconnect the positive cable, and wait for three minutes.
3. Connect the short connector (RED) to the driver's airbag assembly.
   CAUTION: Do not disconnect the passenger's airbag connector.
4. Connect SRS short connector A to the cable reel 3-P connector.
5. Connect the SCS short connector to the service check connector.
6. Reconnect the battery positive cable, then reconnect the negative cable.
7. Turn the ignition switch ON (II), and record the most recent DTC.

Is DTC 1-1 or DTC 1-2 indicated?

1-1

1-2

Open in the driver's airbag inflator; replace the driver's airbag assembly (see page 23-106).

Connect Test Harness C:
1. Turn the ignition switch OFF, and remove the SCS short connector.
2. Disconnect the battery negative cable, then disconnect the positive cable, and wait for three minutes.
3. Remove the glove box, and connect the short connector (RED) to the passenger's airbag assembly (see page 23-75).
4. Remove the dashboard lower cover, and disconnect the cable reel 6-P connector from the SRS main harness.
5. Connect Test Harness C to the cable reel 6-P connector.
   NOTE:
   - Do not connect the battery cables.
   - Disconnect only the SCS short connector.

To page 23-85

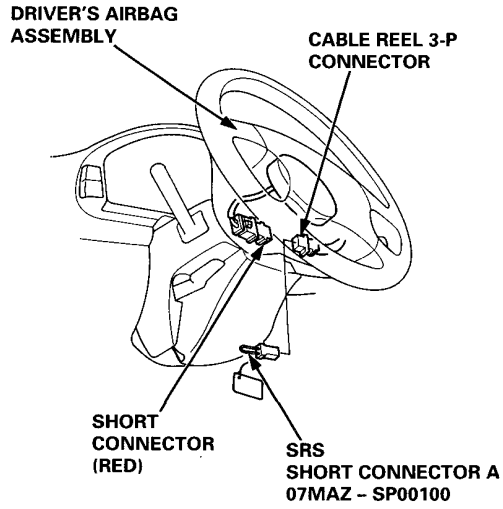

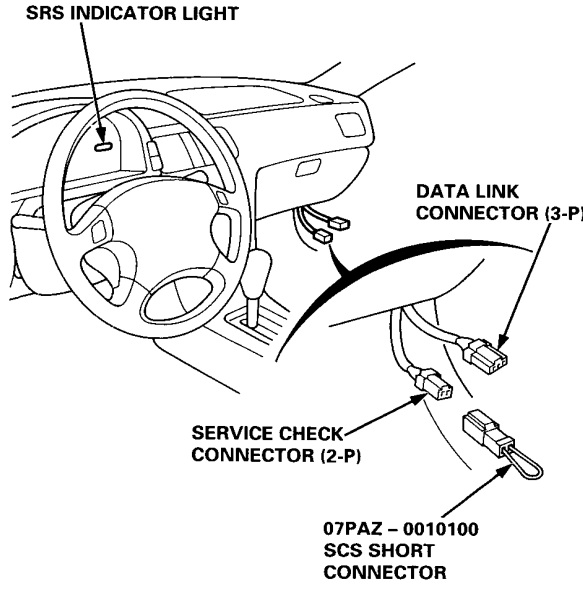

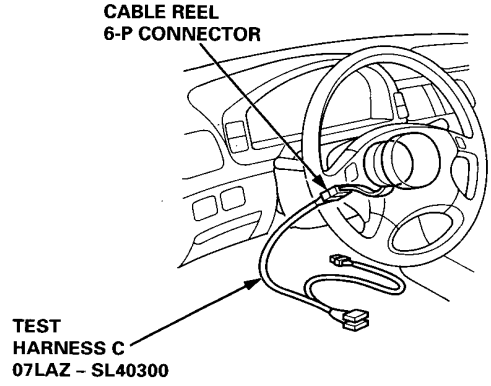

From page 23-84

Check for an open in the cable reel:
Check for continuity between the No. 4 and No. 5 terminals of Test Harness C.

Is there continuity?

YES — NO

Open in the cable reel; replace the cable reel (see page 23-112).

Check the SRS Unit (1):
1. Disconnect the SRS main harness 6-P connector from the cable reel.
2. Disconnect the SRS main harness 18-P connector from the SRS unit, and connect Test Harness B.
3. Connect jumper wires, as shown, to the No. 13, 14, 15, and 16 terminals on rows A (SRS unit end) and B (SRS main harness end) of Test Harness B.
   NOTE: Be careful not to connect jumper wires to the other terminals.
4. Connect the battery positive cable, then connect the negative cable.
5. Connect a voltmeter between terminals No. A1 (+) and No. A5 (–) of Test Harness B.
6. Turn the ignition switch ON (II), and measure voltage. There should be 9.4 – 14 V.
7. Turn the ignition switch OFF, and measure resistance between terminals No. A7 and A5. There should be 0.75 – 1.0 kΩ.
   NOTE: The resistance will be unstable if you measure immediately after you turn the ignition switch OFF. Allow it to settle, then take the reading.

Are voltage and resistance as specified?

YES — NO

Faulty SRS unit; replace the unit (see page 23-116).

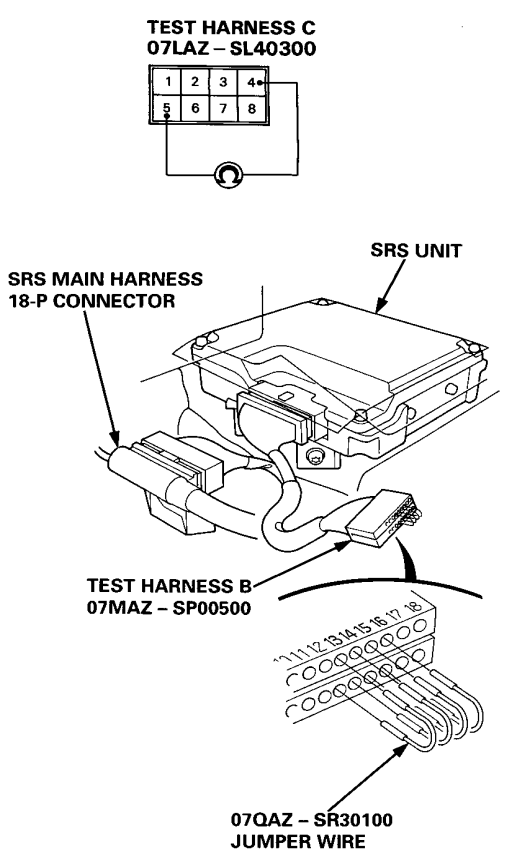

Check for an open in the SRS main harness:
1. Turn the ignition switch OFF.
2. Check for continuity between terminals No. B1 and No. B7 of Test Harness B.

Is there continuity?

YES — NO

Open in the SRS main harness; replace the harness.

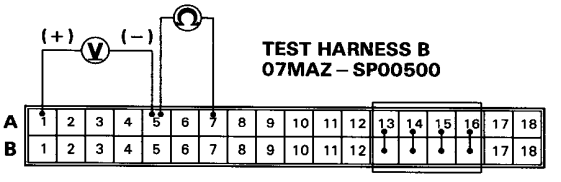

The problem has disappeared due to disconnecting and connecting the connectors. Be sure all terminals make good contact, and recheck the system (see Troubleshooting of Intermittent Failures on page 23-78).

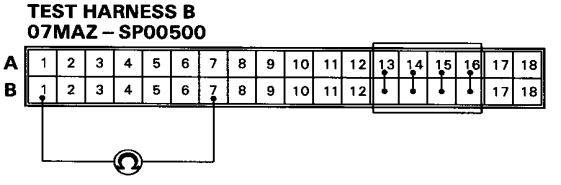

DTC 1-2

CAUTION: Whenever the ignition switch is ON (II), or has been turned OFF for less than three minutes, be careful not to bump the SRS unit; the airbags could accidentally deploy and cause damage or injuries.

Check for a short to another wire in the driver's airbag inflator:
1. Turn the ignition switch OFF.
2. Disconnect the battery negative cable, then disconnect the positive cable, and wait for three minutes.
3. Connect the short connector (RED) to the driver's airbag connector.
   CAUTION:
   - **Do not connect short connector A to the cable reel 3-P connector.**
   - **Do not disconnect the passenger's airbag connector.**
4. Connect the SCS short connector to the service check connector (2-P).
5. Reconnect the battery positive cable, then connect the negative cable.
6. Turn the ignition switch ON (II), and record the most recent DTC.

Is DTC 1-2 or DTC 1-1 indicated?

1-2

1-1

Short in the driver's airbag inflator; replace the driver's airbag assembly (see page 23-106).

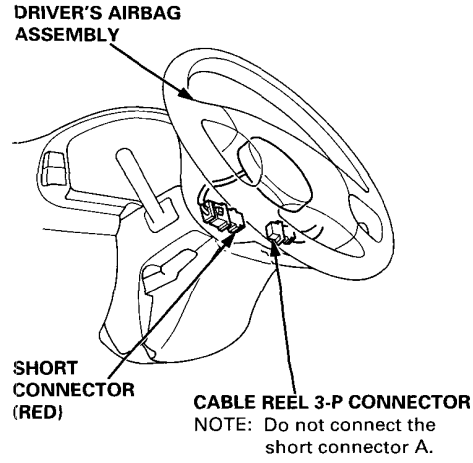

Check for a short in the cable reel:
1. Turn the ignition switch OFF.
   NOTE: Do not disconnect the SCS short connector.
2. Remove the dashboard lower cover, and disconnect the SRS main harness 6-P connector from the cable reel.
3. Turn the ignition switch ON (II), and record the most recent DTC.

Is DTC 1-2 or DTC 1-1 indicated?

1-2

1-1

Short in the cable reel; replace the cable reel (see page 23-112).

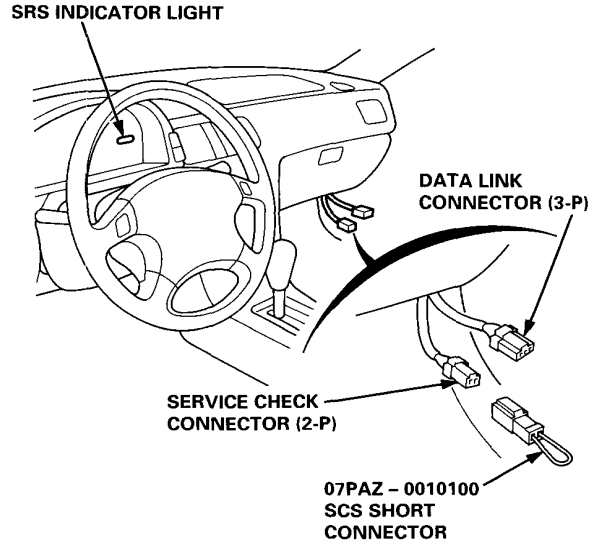

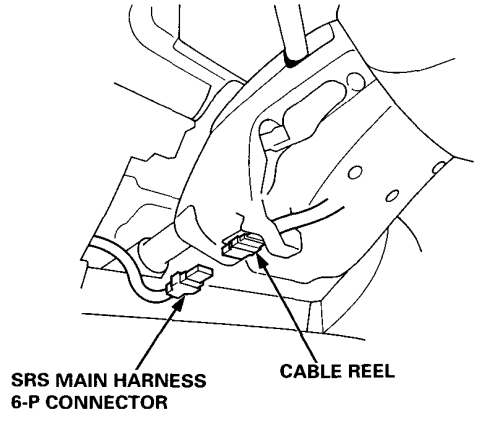

To page 23-87

From page 23-86

Connect Test Harness B:
1. Turn the ignition switch OFF, and disconnect the SCS short connector.
2. Disconnect the battery negative cable, then disconnect the positive cable, and wait for three minutes.
3. Remove the glove box, and connect the short connector (RED) to the passenger's airbag 3-P connector.
4. Disconnect the SRS main harness 18-P connector from the SRS unit, and connect Test Harness B between the SRS unit and the 18-P connector.

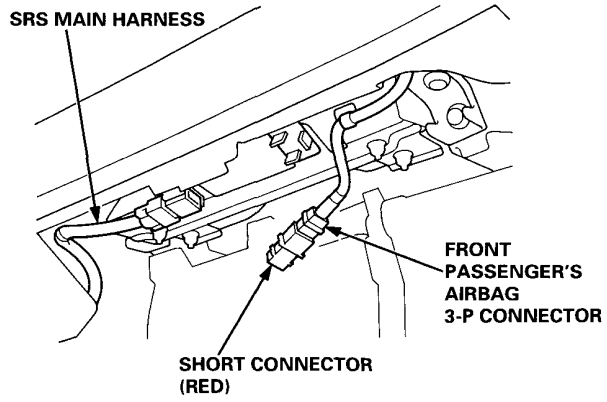

Check the SRS Unit:
1. Connect jumper wires, as shown, to the No. 13, 14, 15, and 16 terminals on rows A (SRS unit end) and B SRS main harness end) of Test Harness B.
   NOTE: Do not connect jumper wires to the other terminals.
2. Connect the battery positive cable, then connect the negative cable.
3. Connect a voltmeter between the No. A1 (+) and A5 (–) terminals of Test Harness B.
4. Turn the ignition switch ON (II), and measure voltage. There should be 9.4 – 14 V.
5. Connect the voltmeter between the No. A7 and A5 terminals of Test Harness B, and measure voltage. There should be 0.5 V or less.

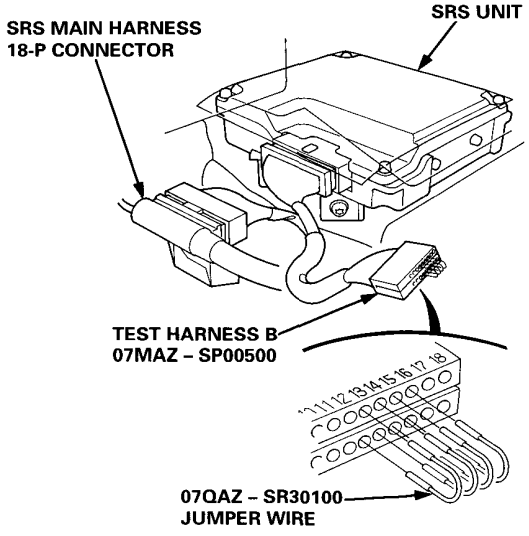

Are the voltages as specified?

YES

NO

Faulty SRS unit; replace the unit (see page 23-116).

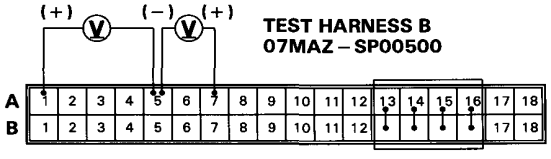

Check for a short in the SRS main harness:
1. Turn the ignition switch OFF.
2. Check for continuity between the No. B1 and B7 terminals of Test Harness B.
   NOTE: Do not connect the cable reel 6-P connector.

Is there continuity?

YES

NO

Short in the SRS main harness; replace the SRS main harness.

The problem has disappeared due to disconnecting and connecting the connectors. Be sure all terminals make good contact, and recheck the system (see Troubleshooting of Intermittent Failures on page 23-78).

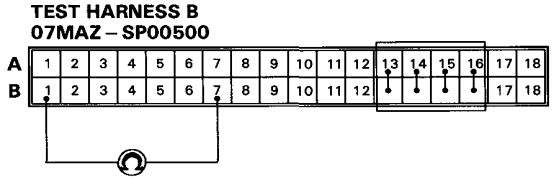

DTC 1-3

CAUTION: Whenever the ignition switch is ON (II), or has been turned OFF for less than three minutes, be careful not to bump the SRS unit; the airbags could accidentally deploy and cause damage or injuries.

Check for a short to power in the driver's airbag inflator:
1. Turn the ignition switch OFF.
2. Disconnect the battery negative cable, then disconnect the positive cable, and wait for three minutes.
3. Connect the short connector (RED) to the driver's airbag connector.
4. Connect SRS short connector A to the cable reel 3-P connector.
   CAUTION: Do not disconnect the passenger's airbag connector.
5. Connect the SCS short connector to the service check connector.
6. Reconnect the battery positive cable, then connect the negative cable.
7. Turn the ignition switch ON (II), and record the most recent DTC.

Is DTC 1-3 or DTC 1-2 indicated?

1-3

1-2

Short to power in the driver's airbag inflator; replace the driver's airbag assembly (see page 23-106).

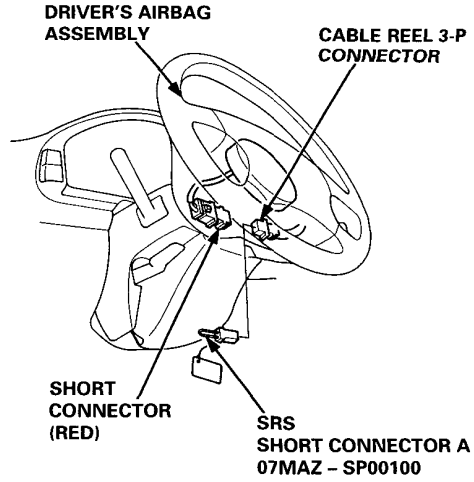

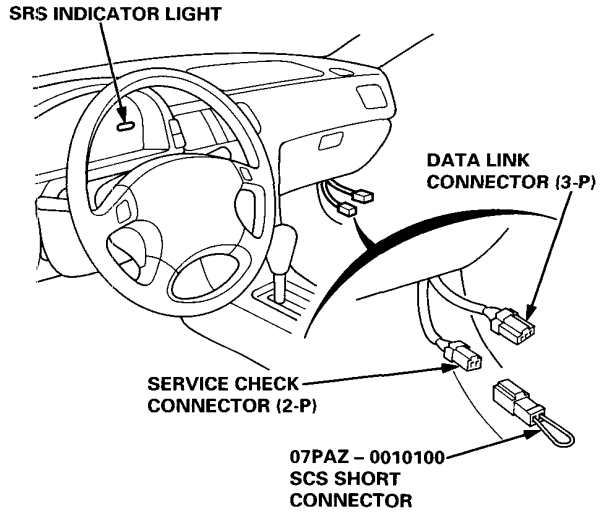

Connect Test Harness B:
1. Turn the ignition switch OFF, and disconnect the SCS short connector.
2. Disconnect the battery negative cable, then disconnect the positive cable, and wait for three minutes.
3. Remove the glove box, and connect the short connector (RED) to the passenger's airbag connector.
4. Disconnect the SRS main harness 18-P connector from the SRS unit, and connect Test Harness B between the SRS unit and the 18-P connector.

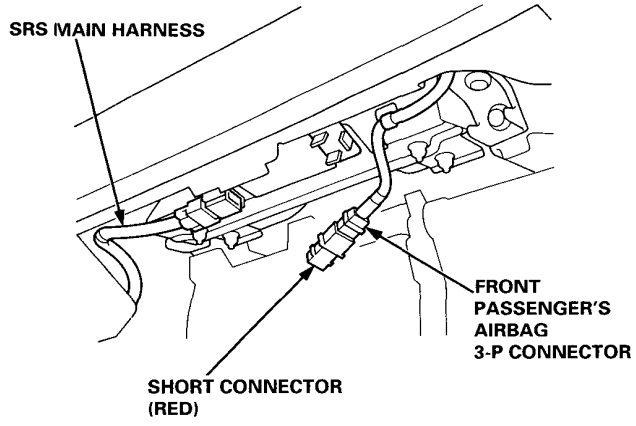

To page 23-89

From page 23-88

Check the SRS Unit:
1. Connect the battery positive cable, then connect the negative cable.
2. Connect a voltmeter between the No. B1 and B5 terminals.
   NOTE: Do not connect any jumper wires to Test Harness B.
3. Turn the ignition switch ON (II), and measure voltage. There should be 0.5 V or less.
4. Connect the voltmeter between the terminals No. B5 and B7, and measure voltage. There should be 0.5 V or less.

Are the voltages as specified?

YES

NO

Faulty SRS unit; replace the unit (see page 23-116).

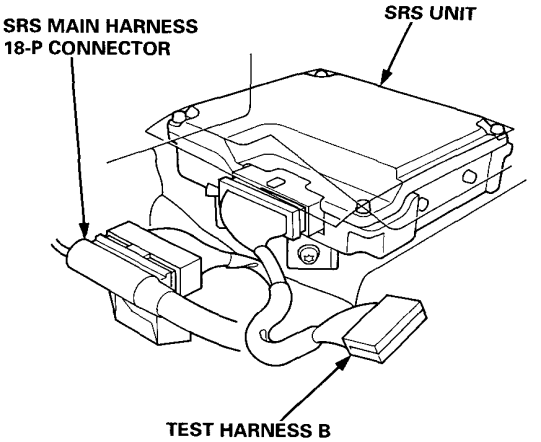

NOTE: Do not connect the jumper wire.

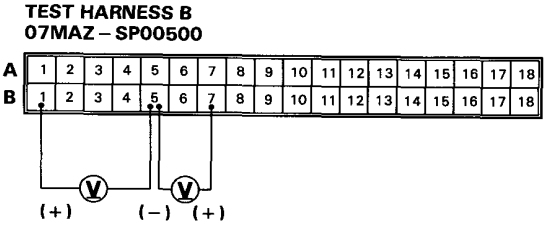

Connect Test Harness C, and check for a short to power in the cable reel:
1. Turn the ignition switch OFF.
2. Remove the dashboard lower cover, and disconnect the cable reel 6-P connector from the SRS main harness.
3. Connect Test Harness C to the cable reel 6-P connector.
4. Connect a voltmeter between the No. 4 terminal of Test Harness C and ground.
5. Turn the ignition switch ON (II), and measure voltage. There should be 0.5 V or less.
6. Connect the voltmeter between the No. 5 terminal and ground, and measure voltage. There should be 0.5 V or less.

Are voltages as specified?

YES

NO

Short to power in the cable reel; replace the cable reel (see page 23-112).

Short to power in the SRS main harness; replace the harness.

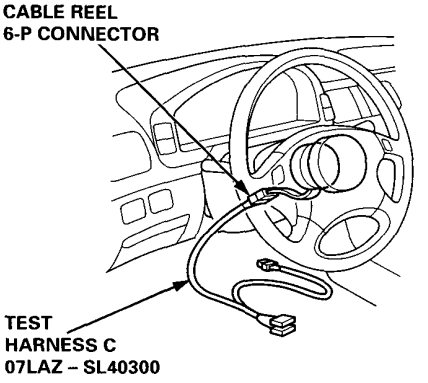

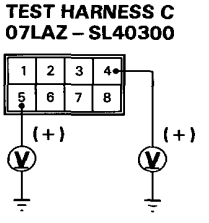

DTC 1-4

CAUTION: Whenever the ignition switch is ON (II), or has been turned OFF for less than three minutes, be careful not to bump the SRS unit; the airbags could accidentally deploy and cause damage or injuries.

Check for a short to ground in the driver's airbag inflator:
1. Turn the ignition switch OFF.
2. Disconnect the battery negative cable, then disconnect the positive cable, and wait for three minutes.
3. Connect the short connector (RED) to the driver's airbag connector.
4. Connect SRS short connector A to the cable reel 3-P connector.
   CAUTION: Do not disconnect the passenger's airbag connector.
5. Connect the SCS short connector to the service check connector.
6. Reconnect the battery positive cable, then connect the negative cable.
7. Turn the ignition switch ON (II), and record the most recent DTC.

Is DTC 1-4 or DTC 1-2 indicated?

1-4 | 1-2

Short to ground in the driver's airbag inflator; replace the driver's airbag assembly (see page 23-106).

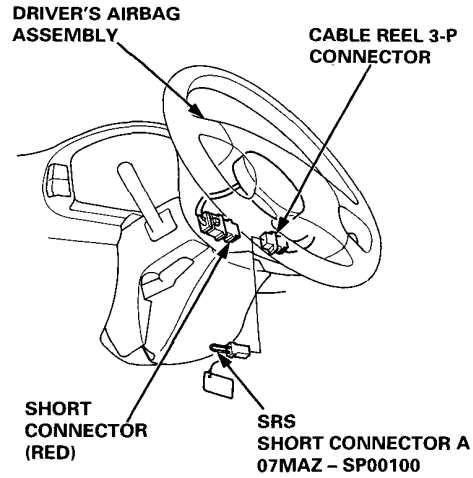

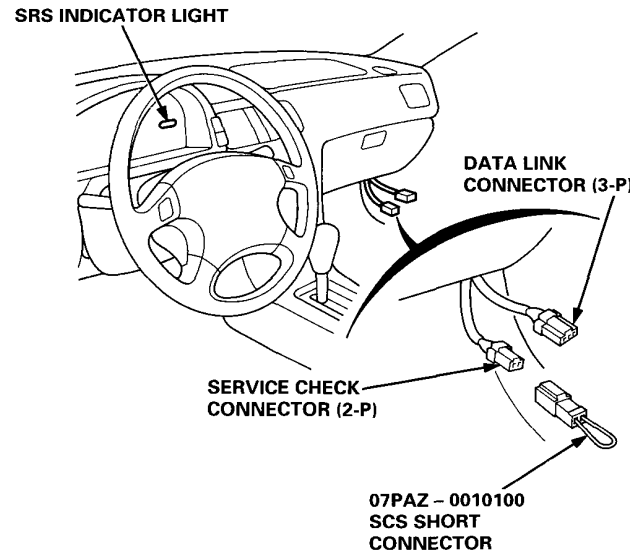

Connect Test Harness B:
1. Turn the ignition switch OFF, and disconnect the SCS short connector.
2. Disconnect the battery negative cable, then disconnect the positive cable, and wait for three minutes.
3. Remove the glove box, and connect the short connector (RED) to the passenger's airbag connector.
4. Disconnect the SRS main harness 18-P connector from the SRS unit, and connect Test Harness B between the SRS unit and the 18-P connector.

To page 23-91

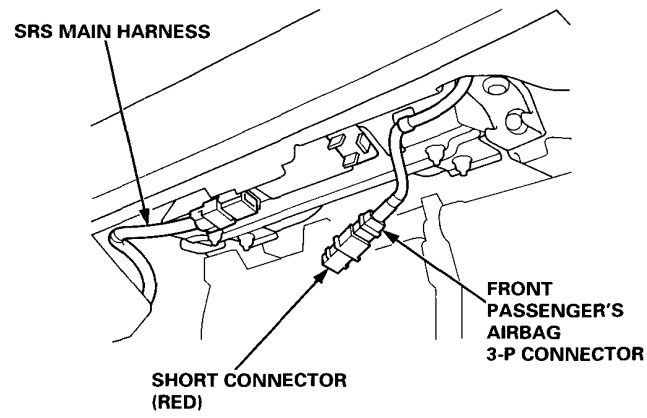

From page 23-90

Check the SRS Unit:
1. Connect jumper wires to the No. 13, 14, 15, and 16 terminals on rows A (SRS unit end) and B (SRS main harness end) of Test Harness B.
   NOTE: Do not connect jumper wires to the other terminals.
2. Connect the battery positive cable, then connect the negative cable.
3. Connect a voltmeter between the No. A1 (+) and A5 (–) terminals of Test Harness B.
4. Turn the ignition switch ON (II), and measure voltage. There should be 9.4 – 14 V.
5. Turn the ignition switch OFF, and measure resistance between the No. A7 and A5 terminals. There should be 0.75 – 1.0 kΩ.
   NOTE: The resistance will be unstable if you measure immediately after you turn the ignition switch OFF. Allow it to settle, then take the reading.

Are voltage and resistance as specified?

YES — NO

Faulty SRS unit; replace the unit (see page 23-116).

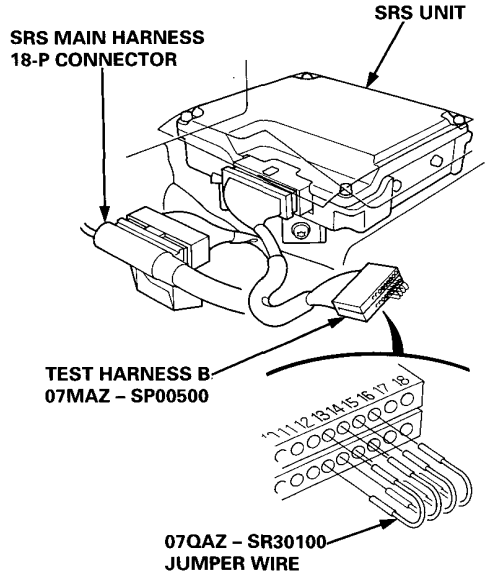

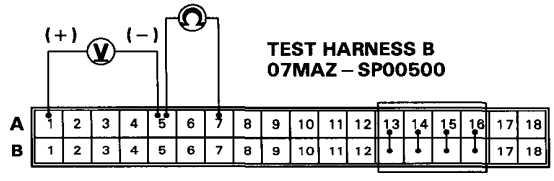

Connect Test Harness C, and check for a short to ground in the cable reel:
1. Turn the ignition switch OFF.
2. Remove the dashboard lower cover, and disconnect the cable reel 6-P connector from the SRS main harness.
3. Connect Test Harness C to the cable reel 6-P connector.
4. Check for continuity between the No. 4 terminal of Test Harness C and ground, and between the No. 5 terminal of Test Harness C and ground.

Is there continuity?

YES — NO

Short to ground in the cable reel; replace the cable reel (see page 23-112).

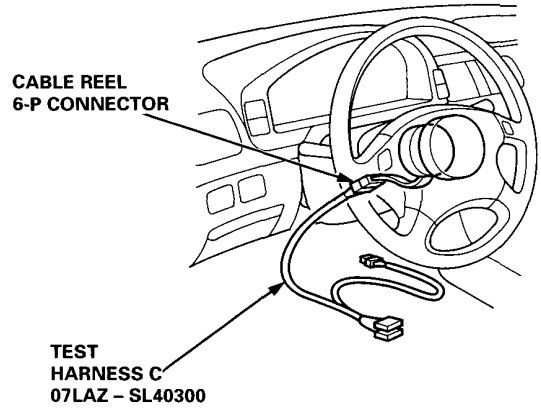

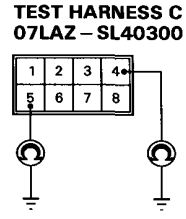

To page 23-92

(cont'd)

DTC 1-4 (cont'd)

From page 23-91

Check for a short to ground in the SRS main harness:
1. Disconnect Test Harness C from the cable reel 6-P connector, and reconnect the cable reel 6-P connector to the SRS main harness.
2. Check for continuity between the No. B1 and B5 terminals, and the No. B5 and B7 terminals of Test Harness B.
   CAUTION:
   - **Make sure the ignition switch is turned OFF.**
   - **Do not disconnect the SRS short connector A from the cable reel 3-P connector.**

Is there continuity?

YES

Short to ground in the SRS main harness; replace the harness.

NO

The problem has disappeared due to disconnecting and connecting the connectors. Be sure all terminals make good contact, and recheck the system (see Troubleshooting of Intermittent Failures on page 23-78).

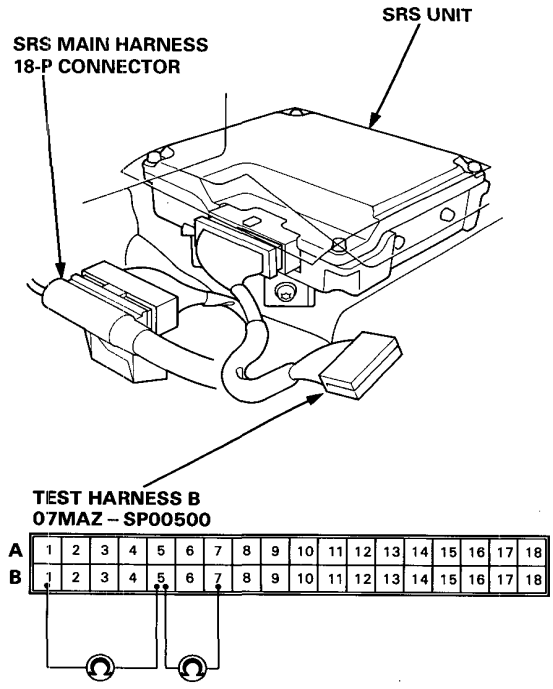

DTC 2-1

CAUTION: Whenever the ignition switch is ON (II), or has been turned OFF for less than three minutes, be careful not to bump the SRS unit; the airbags could accidentally deploy and cause damage or injuries.

Check for an open in the passenger's airbag inflator:
1. Turn the ignition switch OFF.
2. Disconnect the battery negative cable, then disconnect the positive cable, and wait for three minutes.
3. Connect the short connector (RED) to the passenger's airbag connector.
4. Connect the SRS short connector A to the SRS main harness 3-P connector.
   CAUTION: Do not disconnect the driver's airbag connector.
5. Connect the SCS short connector to the service check connector.
6. Reconnect the battery positive cable, then connect the negative cable.
7. Turn the ignition switch ON (II), and record the most recent DTC.

Is DTC 2-1 or DTC 2-2 indicated?

2-1 — 2-2

Open in the passenger's airbag inflator; replace the passenger's airbag assembly (see page 23-106).

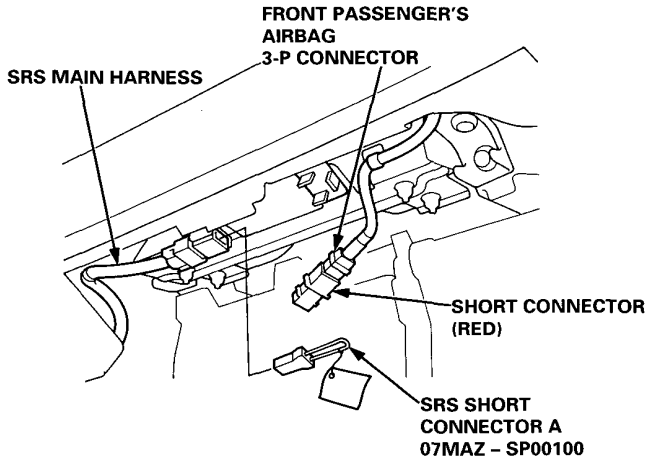

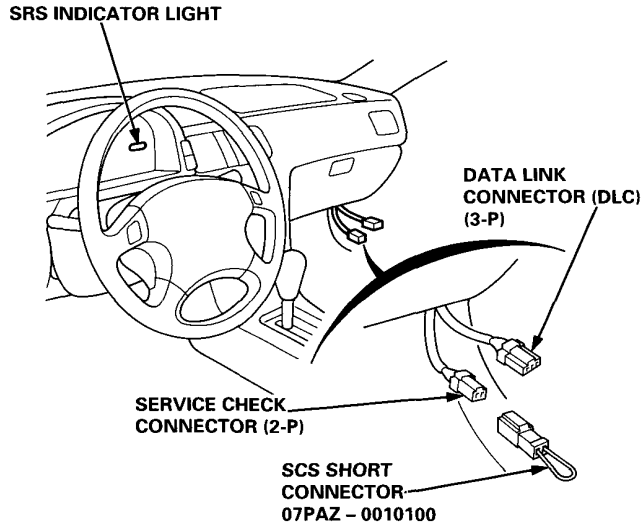

Connect Test Harness B:
1. Turn the ignition switch OFF, and remove the SCS short connector.
2. Disconnect the battery negative cable, then disconnect the positive cable, and wait for three minutes.
3. Connect the short connector (RED) to the driver's airbag connector.
4. Disconnect the SRS main harness 18-P connector from the SRS unit, and connect Test Harness B between the SRS unit and the 18-P connector.
5. Connect jumper wires to the No. 13, 14, 15, and 16 terminals on rows A (SRS unit end) and B (SRS main harness end) of Test Harness B.
   NOTE: Do not connect jumper wires to the other terminals.

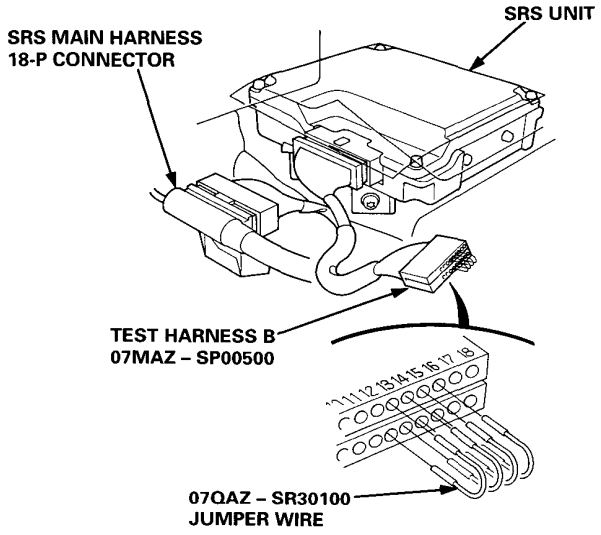

To page 23-94

(cont'd)

DTC 2-1 (cont'd)

From page 23-93

Check the SRS unit:
1. Connect the battery positive cable, then connect the negative cable.
2. Connect a voltmeter between terminals No. A2 and A5 of Test Harness B.
3. Turn the ignition switch ON (II), and measure voltage. There should be 9.4 – 14 V.
4. Turn the ignition switch OFF, and measure resistance between terminals No. A8 and A5. There should be 0.75 – 1.0 kΩ.
   NOTE: The resistance will be unstable if you measure immediately after you turn the ignition switch OFF. Allow it to settle, then take the reading.

Are voltage and resistance as specified?

YES

NO

Faulty SRS unit; replace the SRS unit (see page 23-116).

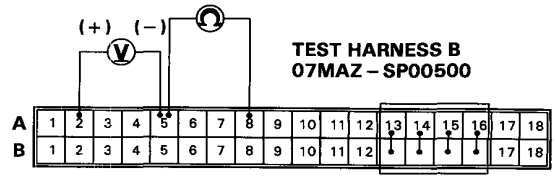

Check for an open in the SRS main harness:
1. Turn the ignition switch OFF.
2. Check for continuity between terminals No. B2 and B8 of Test Harness B.
   CAUTION: Do not disconnect SRS short connector A from the SRS main harness.

Is there continuity?

YES

NO

Open in the SRS main harness; replace the harness.

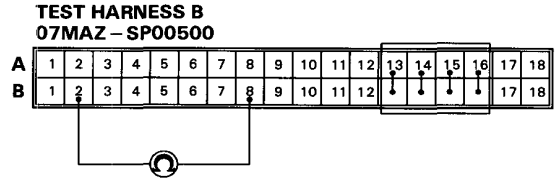

The problem has disappeared due to disconnecting and connecting the connectors. Be sure all terminals make good contact, and recheck the system (see Troubleshooting of Intermittent Failures on page 23-78).

DTC 2-2

CAUTION: Whenever the ignition switch is ON (II), or has been turned OFF for less than three minutes, be careful not to bump the SRS unit; the airbags could accidentally deploy and cause damage or injuries.

Check for a short to another wire in the passenger's airbag inflator:
1. Turn the ignition switch OFF.
2. Disconnect the battery negative cable, then disconnect the positive cable, and wait for three minutes.
3. Connect the short connector (RED) to the passenger's airbag connector.
   CAUTION:
   - **Do not connect short connector A to the SRS main harness connector.**
   - **Do not disconnect the driver's airbag connector.**
4. Connect the SCS short connector to the service check connector.
5. Reconnect the battery positive cable, then connect the negative cable.
6. Turn the ignition switch ON (II), and record the most recent DTC.

Is DTC 2-2 or DTC 2-1 indicated?

2-2

2-1

Short to another wire in the passenger's airbag inflator; replace the passenger's airbag assembly (see page 23-106).

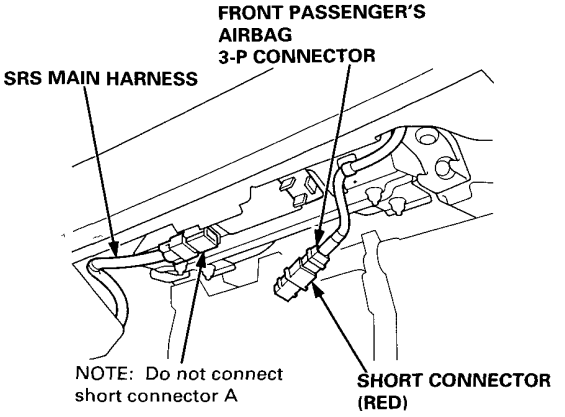

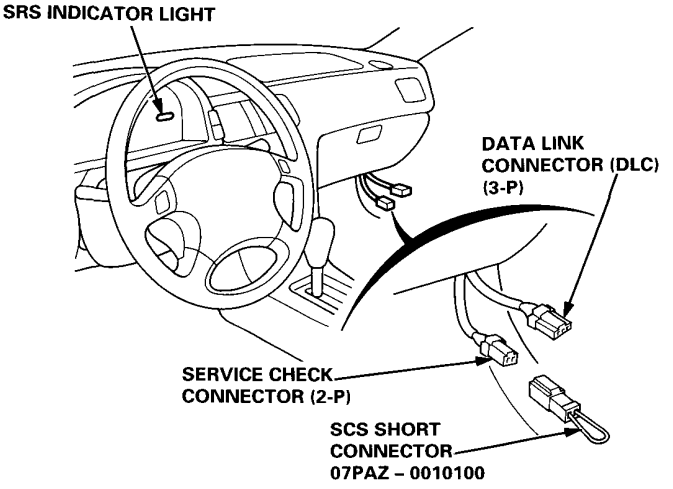

Connect Test Harness B:
1. Turn the ignition switch OFF, and disconnect the SCS short connector.
2. Disconnect the battery negative cable, then disconnect the positive cable, and wait for three minutes.
3. Connect the short connector (RED) to the driver's airbag connector.
4. Disconnect the SRS main harness 18-P connector from the SRS unit.
5. Connect Test Harness B between the SRS unit and the 18-P connector.
6. Connect the No. 13, 14, 15, and 16 terminals on rows A (SRS unit end) and B (SRS main harness end) of Test Harness B with jumper wires.
   NOTE: Do not connect jumper wires to the other terminals.

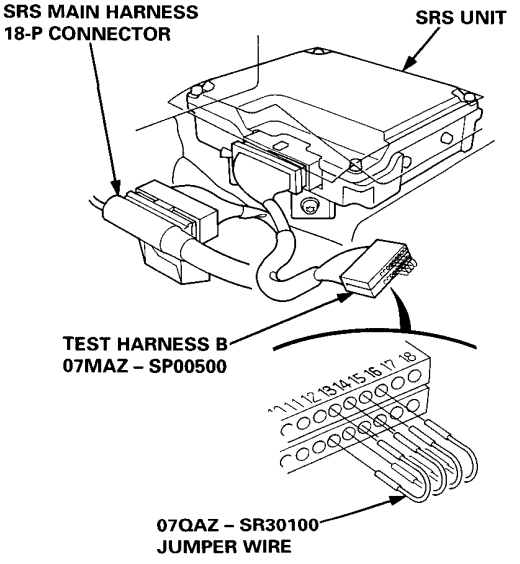

To page 23-96

(cont'd)

DTC 2-2 (cont'd)

From page 23-95

Check the SRS unit:
1. Connect the battery positive cable, then connect the negative cable.
2. Connect a voltmeter between the No. A2 and A5 terminals of Test Harness B.
3. Turn the ignition switch ON (II), and measure voltage. There should be 9.4 – 14 V.
4. Connect the voltmeter between the No. A8 and A5 terminals of Test Harness B, and measure voltage. There should be 0.5 V or less.

Are voltages as specified?

YES

NO

Faulty SRS unit; replace the SRS unit (see page 23-116).

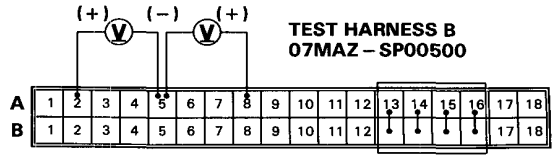

Check for short to another wire in the SRS main harness:
1. Turn the ignition switch OFF.
2. Check for continuity between the No. B2 and B8 terminals of Test Harness B.

Is there continuity?

YES

Short in the SRS main harness; replace the harness.

NO

The problem has disappeared due to disconnecting and connecting the connectors. Be sure all terminals make good contact, and recheck the system (see Troubleshooting of Intermittent Failures on page 23-78).

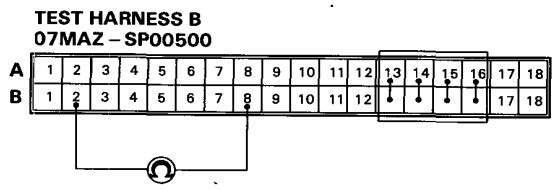

DTC 2-3

CAUTION: Whenever the ignition switch is ON (II), or has been turned OFF for less than three minutes, be careful not to bump the SRS unit; the airbags could accidentally deploy and cause damage or injuries.

Check for short to power in the passenger's airbag inflator:
1. Turn the ignition switch OFF.
2. Disconnect the battery negative cable, then disconnect the positive cable, and wait for three minutes.
3. Connect the short connector (RED) to the passenger's airbag connector.
4. Connect SRS short connector A to the SRS main harness 3-P connector.
   CAUTION: *Do not disconnect the driver's airbag connector.*
5. Connect the SCS short connector to the service check connector.
6. Reconnect the battery positive cable, then connect the negative cable.
7. Turn the ignition switch ON (II), and record the most recent DTC.

Is DTC 2-3 or DTC 2-2 indicated?

2-3

2-2

Short to power in the passenger's airbag inflator; replace the passenger's airbag assembly (see page 23-106).

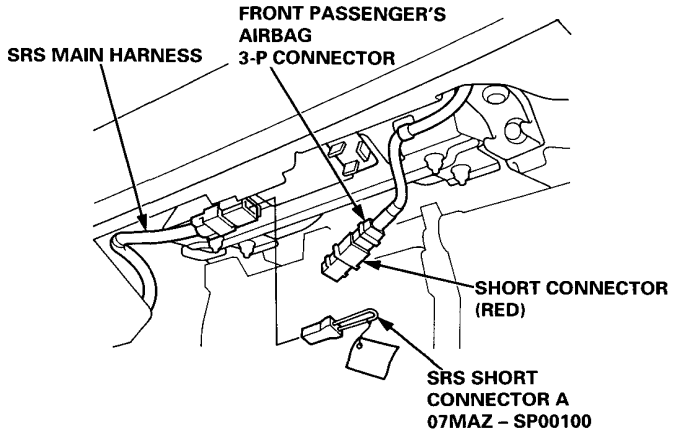

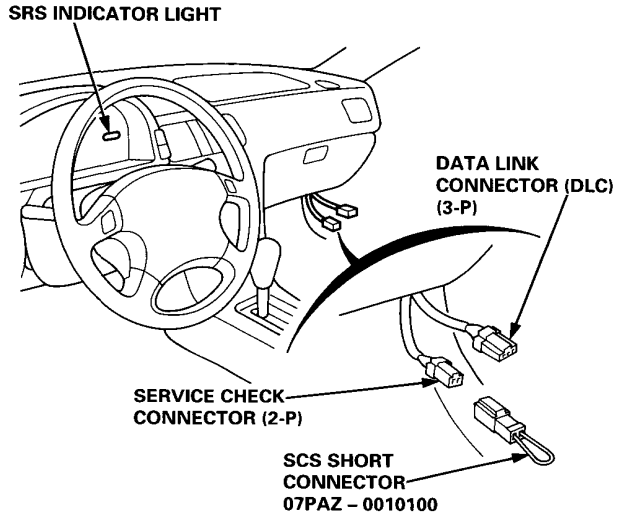

Connect Test Harness B:
1. Turn the ignition switch OFF, and disconnect the SCS short connector.
2. Disconnect the battery negative cable, then disconnect the positive cable, and wait for three minutes.
3. Connect the short connector (RED) to the driver's airbag connector.
4. Disconnect the SRS main harness 18-P connector from the SRS unit, and connect Test Harness B between the SRS unit and the 18-P connector.
5. Reconnect the battery positive cable, then connect the negative cable.
6. Connect a voltmeter between the No. B2 and B5 terminals of Test Harness B.
7. Turn the ignition switch ON (II), and measure voltage. There should be 0.5 V or less
8. Connect the voltmeter between the No. B8 and B5 terminals of Test Harness B, and measure voltage. There should be 0.5 V or less.

Are voltages as specified?

YES

NO

Short to power in the SRS main harness; replace the harness.

Faulty SRS unit; replace the SRS unit (see page 23-116).

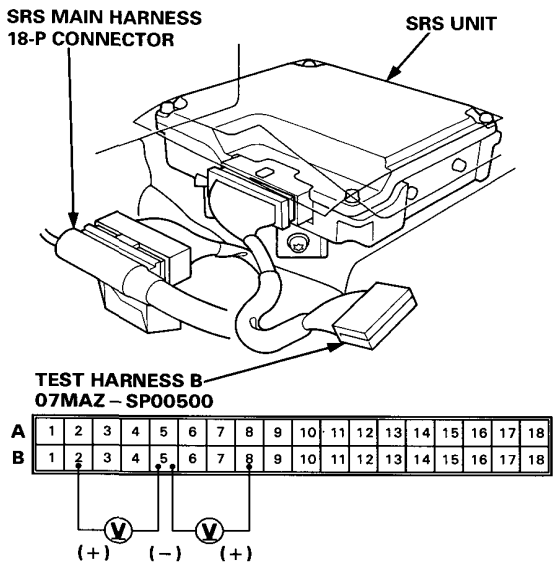

DTC 2-4

CAUTION: Whenever the ignition switch is ON (II), or has been turned OFF for less than three minutes, be careful not to bump the SRS unit; the airbags could accidentally deploy and cause damage or injuries.

Check for short to ground in the passenger's airbag inflator:
1. Turn the ignition switch OFF.
2. Disconnect the battery negative cable, then disconnect the positive cable, and wait for three minutes.
3. Connect the short connector (RED) to the passenger's airbag connector.
4. Connect SRS short connector A to the SRS main harness 3-P connector.
   CAUTION: Do not disconnect the driver's airbag connector.
5. Connect the SCS short connector to the service check connector.
6. Reconnect the battery positive cable, then connect the negative cable.
7. Turn the ignition switch ON (II), and record the most recent DTC.

Is DTC 2-4 or DTC 2-2 indicated?

2-4

2-2

Short to ground in the passenger's airbag inflator; replace the passenger's airbag assembly (see page 23-106).

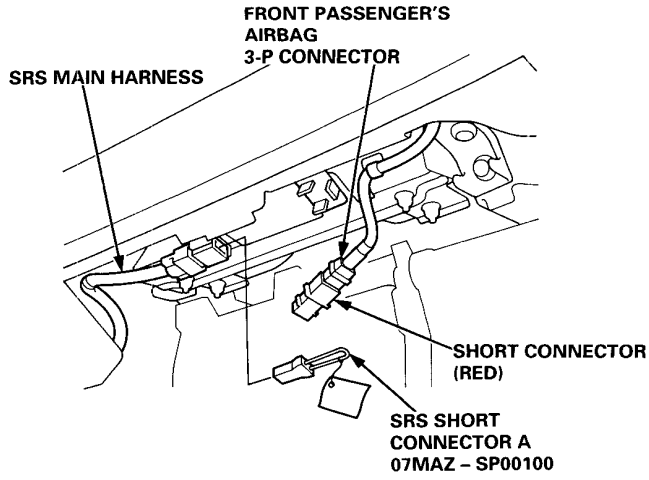

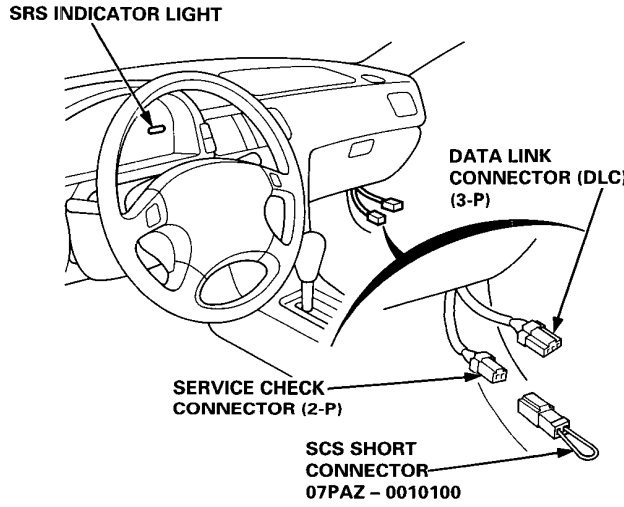

Connect Test Harness B:
1. Turn the ignition switch OFF, and disconnect the SCS short connector.
2. Disconnect the battery negative cable, then disconnect the positive cable, and wait for three minutes.
3. Connect the short connector (RED) to the driver's airbag connector.
4. Disconnect the SRS main harness 18-P connector from the SRS unit, and connect Test Harness B between the SRS unit and the 18-P connector.
5. Connect the No. 13, 14, 15, and 16 terminals on rows A (SRS unit end) and B (SRS main harness end) of Test Harness B with jumper wires.
   NOTE: Do not connect jumper wires to the other terminals.

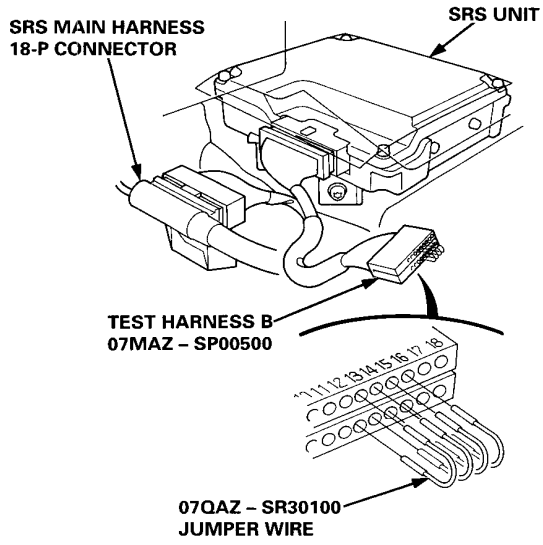

To page 23-99

From page 23-98

Check the SRS unit:
1. Reconnect the battery positive cable, then connect the negative cable.
2. *Connect a voltmeter* between the No. A2 and A5 terminals of Test Harness B.
3. Turn the ignition switch ON (II), and measure voltage. There should be 9.4 – 14 V.
4. Turn the ignition switch OFF, and measure resistance between the No. A8 and A5 terminals of Test Harness B. There should be 0.75 – 1.0 kΩ
   NOTE: The resistance will be unstable if you measure immediately after you turn the ignition switch OFF. Allow it to settle, then take the reading.

Are voltage and resistance as specified?

YES — NO

Faulty SRS unit; replace the SRS unit (see page 23-116).

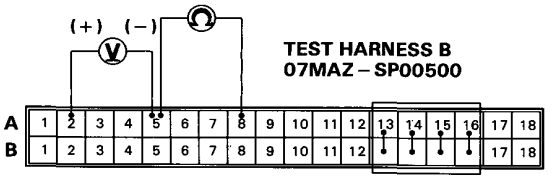

Check for short to ground in the SRS main harness:
1. Check for continuity between the No. B2 and B5 terminals, and the No. B8 and B5 terminals of Test Harness B.
   CAUTION: Do not disconnect short connector A from the SRS main harness 3-P connector.

Is there continuity?

YES — NO

Short to ground in the SRS main harness; replace the harness.

The problem has disappeared due to disconnecting and connecting the connectors. Be sure all terminals make good contact, and recheck the system (see Troubleshooting of Intermittent Failures on page 23-78).

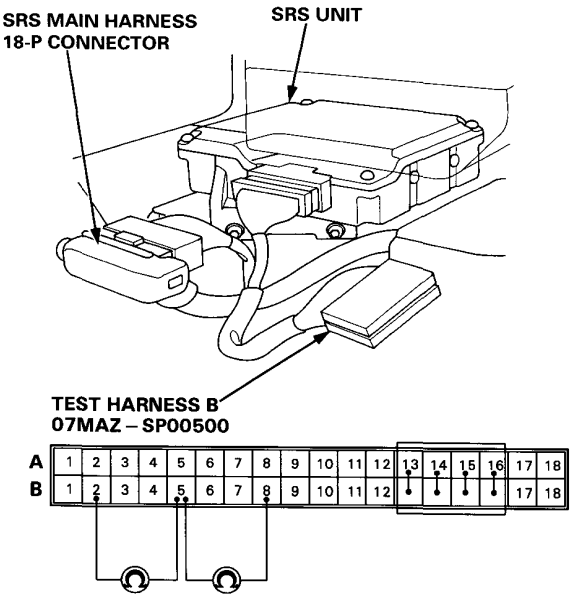

Troubleshooting (SRS-Type III)

DTC 9-1 or No Code

CAUTION: Whenever the ignition switch is ON (II), or has been turned OFF for less than three minutes, be careful not to bump the SRS unit; the airbags could accidentally deploy and cause damage or injuries.

Check the SRS indicator circuit input voltage:
1. Turn the ignition switch OFF.
2. Disconnect the SRS main harness 8-P connector from the main wire harness.
3. Connect a voltmeter between the No. 8 terminal (+) of the SRS main harness 8-P connector and ground.
4. Turn the ignition switch ON (II), and measure voltage.

Is there 8.5 V or more six seconds after the ignition switch has been turned ON (II)?

YES

NO

Check for short to ground in the SRS indicator light circuit (1):
1. Turn the ignition switch OFF.
2. Check for continuity between the No. 8 terminal (+) of the main wire harness 8-P connector and ground.

Is there continuity (200 Ω or less)?

YES

NO

Check for short to ground in the SRS indicator light circuit (2):
1. Disconnect the dashboard wire harness 14-P connector from the main wire harness.
2. Check for continuity between the No. 13 terminal (LHD) or No. 3 terminal (RHD) of the dashboard wire harness 14-P connector and ground.

Is there continuity (200 Ω or less)?

YES

NO

Failure in the SRS unit due to short to ground in the BLU wire of the main wire harness; replace the main wire harness and the SRS unit.

(B)
To page 23-101

(C)
To page 23-101

(A)
To page 23-102

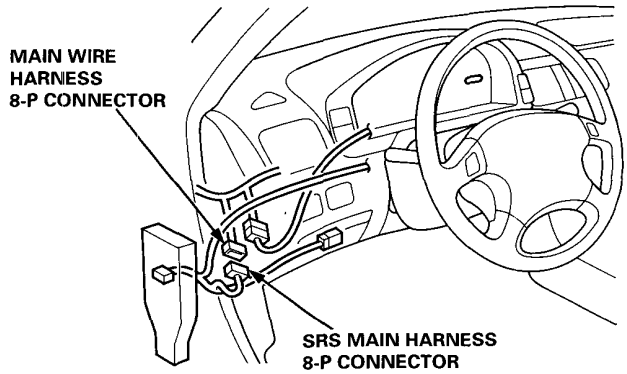

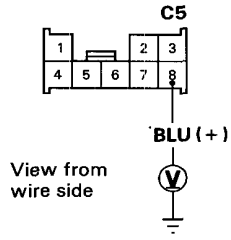

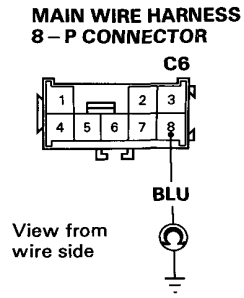

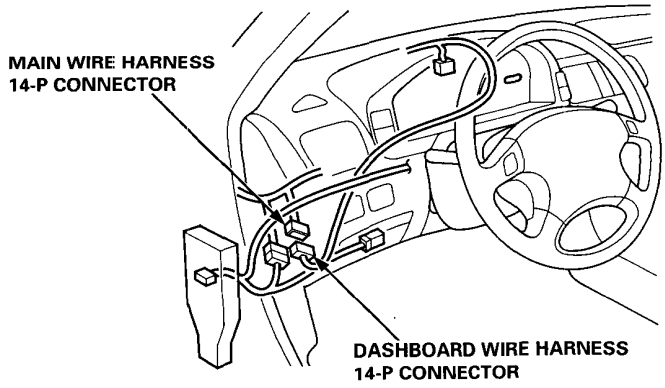

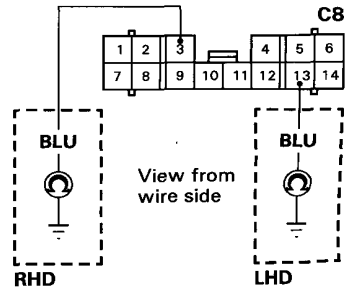

From page 23-100

(B)

Check for short to ground in the SRS indicator light circuit (3):
1. Remove the gauge assembly.
2. Check for continuity between the B11 and B12 terminals of the gauge assembly 14-P connector.

Is there continuity (200 Ω or less)?

YES

Failure in the SRS unit due to short to ground in the SRS indicator light circuit in the gauge assembly; replace the gauge assembly and the SRS unit.

NO

Failure in the SRS unit due to short to ground in the BLU wire of the dashboard wire harness; replace the dashboard wire harness and the SRS unit.

From page 23-100

(C)

Check for an open in the SRS main harness:
1. Turn the ignition switch OFF.
2. Disconnect the battery negative cable, then disconnect the positive cable, and wait for three minutes.
3. Connect the short connectors (RED) to the airbag connectors (see page 23-75).
4. Disconnect the SRS main harness 18-P connector from the SRS unit, and connect Test Harness B between the SRS unit and the 18-P connector.
5. Check for continuity between the No. B11 terminal of Test Harness B and the No. 8 terminal of the SRS main harness 8-P connector.

Is there continuity?

YES

Open in the SRS main harness; replace the harness.

NO

(E)

To page 23-102

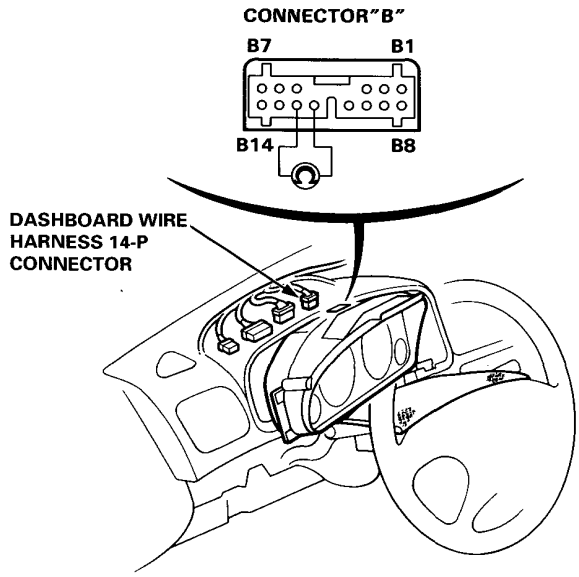

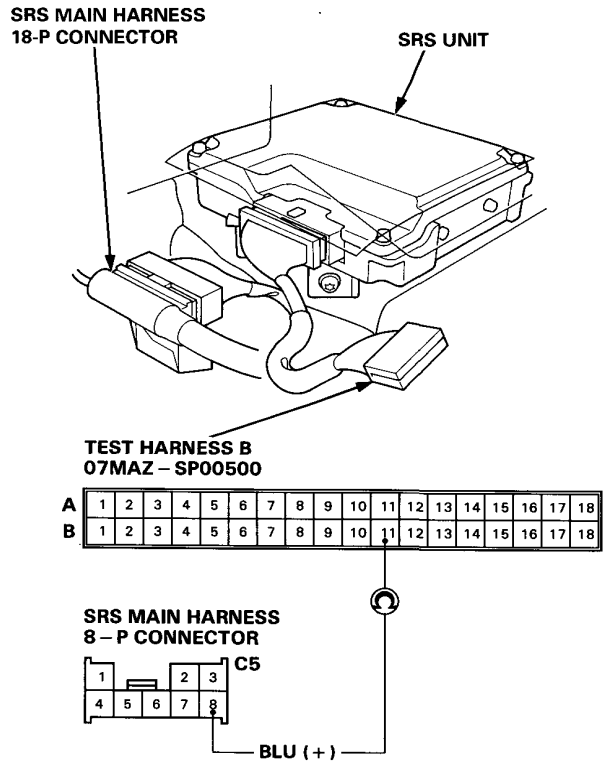

(cont'd)

DTC 9-1 or No Code (cont'd)

From page 23-101

(E)

Check for continuity between terminals No. B11 and No. B5 of Test Harness B.

Is there continuity?

YES — NO

Failure in the SRS unit due to short to ground in the SRS main harness; replace the SRS main harness and the SRS unit.

Faulty SRS unit; replace the SRS unit.

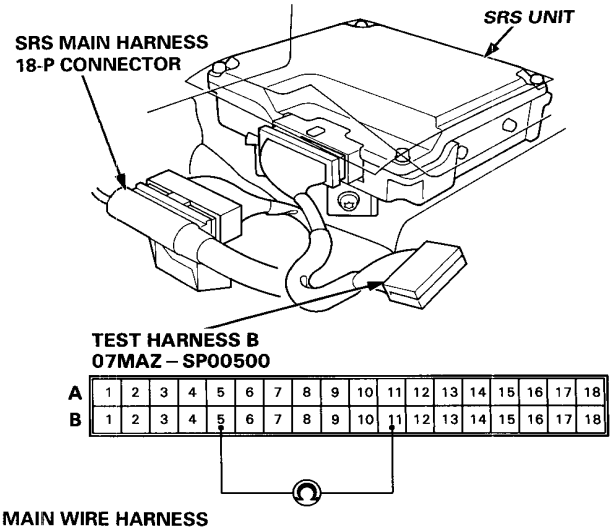

From page 23-100

(A)

Check the SRS indicator light circuit:
1. Turn the ignition switch OFF.
2. Connect the SRS main harness 8-P connector to the main wire harness.
3. Disconnect the dashboard wire harness 14-P connector from the main wire harness.
4. Connect a voltmeter between the No. 13 terminal (LHD) or No. 3 terminal (RHD) (+) of the main wire harness 14-P connector and ground.
5. Turn the ignition switch ON (II), and measure voltage.

Is there 8.5 V or more six seconds after the ignition switch has been turned ON?

YES — NO

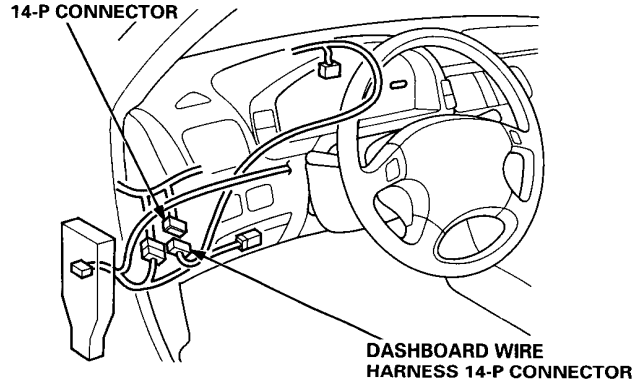

Check the main wire harness:
1. Turn the ignition switch OFF.
2. Check for continuity between the No. 13 terminal (LHD) or No. 3 terminal (RHD) of the main wire harness 14-P connector and body ground.

Is there continuity?

YES — NO

Failure in the SRS unit due to short to ground in the BLU wire of the SRS main harness; replace the SRS main harness and the SRS unit.

Open in the BLU wire of the SRS main harness; replace the SRS main harness.

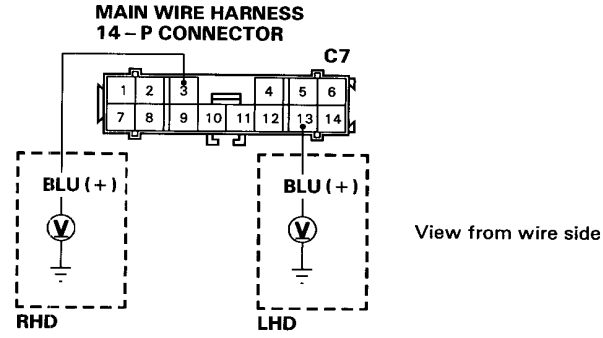

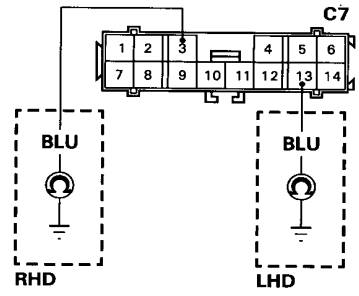

To page 23-103

From page 23-102

Check the SRS indicator light circuit:
1. Turn the ignition switch OFF.
2. Connect the dashboard wire harness 14-P connector to the main wire harness.
3. Remove the gauge assembly.
4. Disconnect the dashboard wire harness 14-P connector from the gauge assembly.
5. Connect a voltmeter between the No. 10 terminal (+) of the dashboard wire harness 14-P connector and ground.
6. Turn the ignition switch ON (II), and measure voltage.

Is there 8.5 V or more six seconds after the ignition switch has been turned ON (II)?

YES — NO

Faulty SRS indicator light circuit in the gauge assembly; replace the gauge assembly.

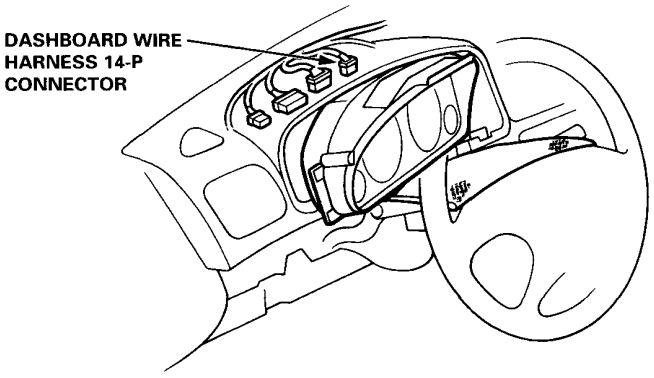

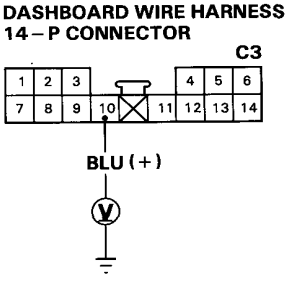

Check the dashboard wire harness:
1. Turn the ignition switch OFF.
2. Check for continuity between the No. 10 terminal of the dashboard wire harness 14-P connector and body ground.

Is there continuity (200 Ω or less)?

YES — NO

Failure in the SRS unit due to short to ground in the BLU wire of the dashboard wire harness. Replace the dashboard wire harness and the SRS unit.

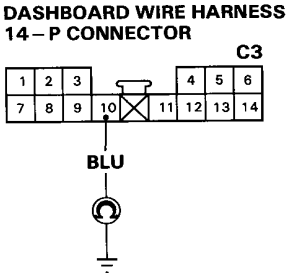

Open in the BLU wire of the dashboard wire harness; Replace the dashboard wire harness.

DTC 9-2

CAUTION: Whenever the ignition switch is ON (II), or has been turned OFF for less than three minutes, be careful not to bump the SRS unit; the airbags could accidentally deploy and cause damage or injuries.

Check the SRS fuse:
1. Turn the ignition switch OFF.
2. Check for blown No. 3 (10 A) fuse.

Is the fuse OK?

YES — NO

Replace the fuse. Turn the ignition switch ON (II), and check that the fuse doesn't blow.

Does the fuse blow?

YES — NO → END

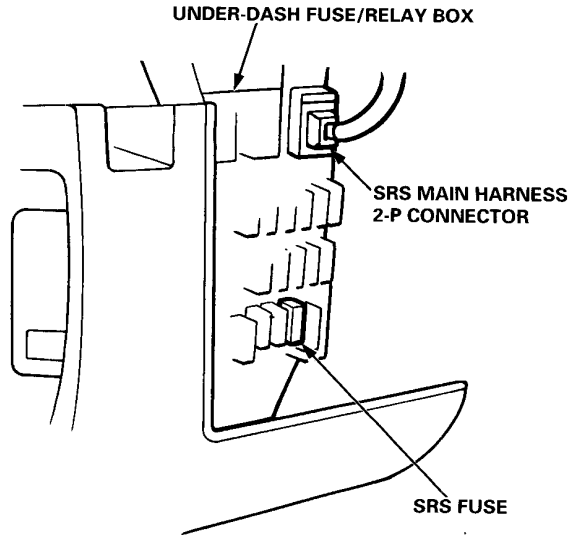

Check for short to ground between the under-dash fuse/relay box and the SRS unit:
1. Turn the ignition switch OFF.
2. Disconnect the battery negative cable, then disconnect the positive cable, and wait for three minutes.
3. Connect the short connectors (RED) to the airbag connectors (see page 23-75).
4. Disconnect the SRS main harness 18-P connector from the SRS unit, and connect Test Harness B between the 18-P connector and the SRS unit.
5. Check for continuity between the No. B13 and B5 terminals of Test Harness B.

Is there continuity?

YES — NO

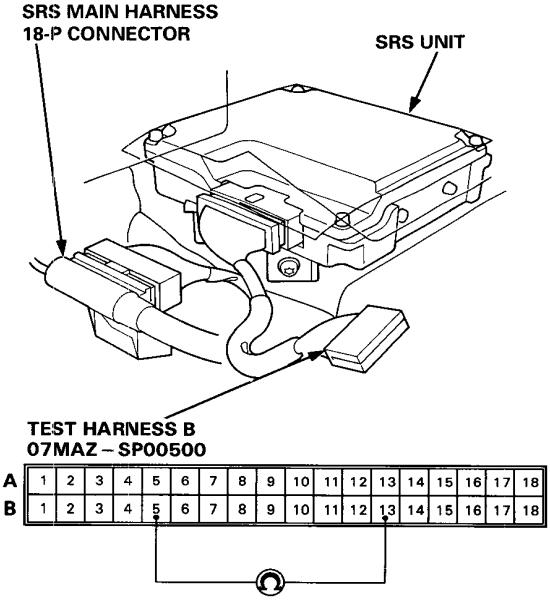

Check for short to ground in the SRS main harness:
1. Disconnect the SRS main harness 2-P connector from the fuse/relay box.
2. Check for continuity between the No. B13 and B5 terminals of Test Harness B.

Is there continuity?

YES — NO

Short to ground in the SRS main harness; replace the harness.

Short to ground in the SRS fuse block; replace the SRS fuse block.

Faulty SRS unit; replace the SRS unit.

To page 23-105

From page 23-104

Connect Test Harness B:
1. Disconnect the negative battery cable, then the positive cable, and wait for three minutes.
2. Connect the short connectors (RED) to the airbag connectors (see page 23-75).
3. Disconnect the SRS main harness 18-P connector from the SRS unit, and connect Test Harness B between the 18-P connector and the SRS unit.
4. Reconnect the battery positive cable, then the negative cable.

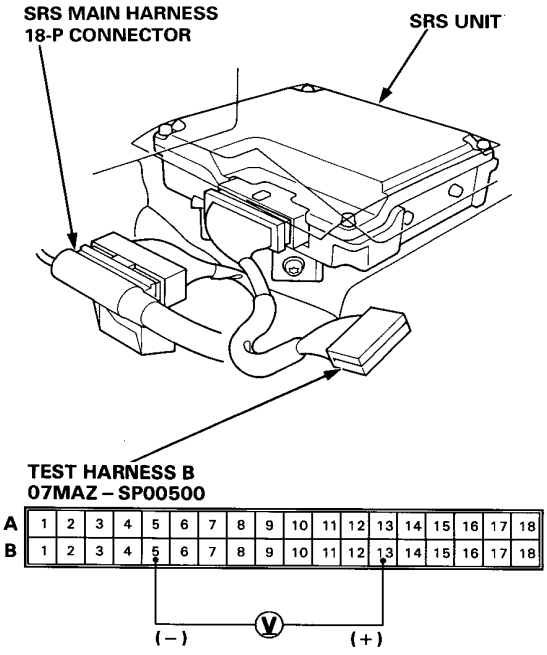

Check for an open in the SRS main harness:
1. Connect a voltmeter between the No. B13 and B5 terminals of Test Harness B.
2. Turn the ignition switch ON (II), and measure voltage.

Is there battery voltage?

YES

Faulty SRS unit; replace the SRS unit.

NO

Open in the SRS main harness; replace the harness.

Airbag Assembly (SRS-Type III)

Replacement

⚠WARNING Store a removed airbag assembly with the pad surface up, if the airbag is improperly stored face down, accidental deployment could propel the unit with enough force to cause serious injury.

CAUTION:

- **Do not install used SRS parts from another car. When repairing, use only new SRS parts.**
- **Carefully inspect the airbag assembly before you install it. Do not install an airbag assembly that shows signs of being dropped or improperly handled, such as dents, cracks or deformation.**
- **Always keep the short connectors (RED) on the airbags when the harness is disconnected.**
- **Do not disassemble or tamper with the airbag assembly.**

1. Disconnect the battery negative cable, then disconnect the positive cable, and wait at least three minutes.

2. Connect the short connectors (RED) to the airbag side of the connectors:

Driver's Side:

- Remove the access panel from the steering wheel, then remove the short connector (RED) from the panel.

- Disconnect the 3-P connector between the driver's airbag and cable reel, then connect the short connector (RED) to the airbag side of the connector.

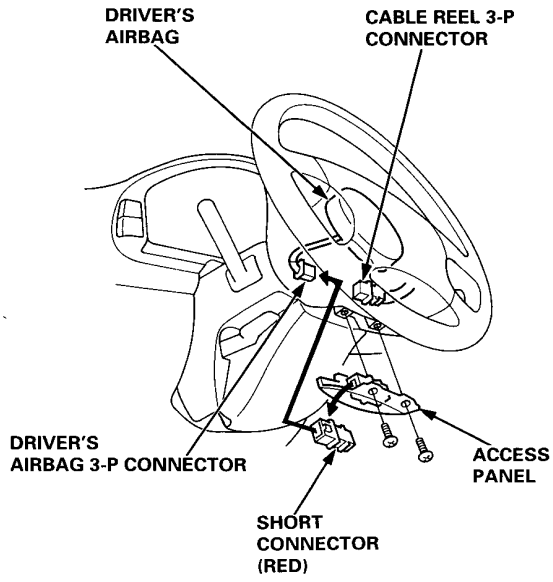

Front Passenger's Airbag:

- Remove the glove box, then remove the short connector (RED) from its holder.

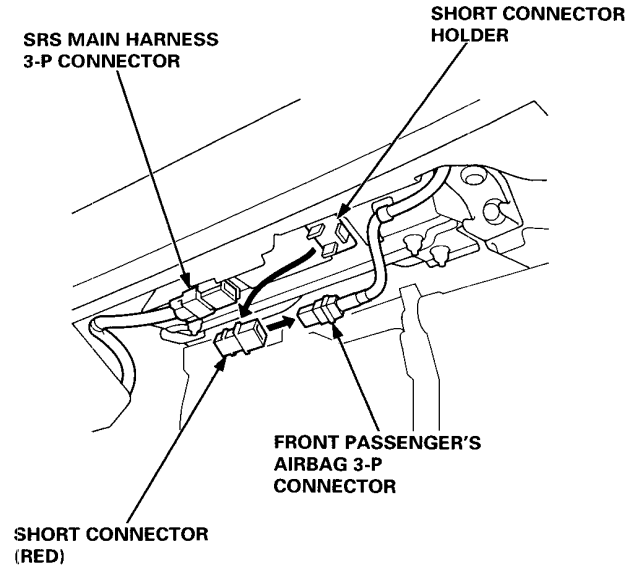

- Disconnect the front passenger's airbag 3-P connector from the SRS main harness, and connect the short connector (RED) to the front passenger's airbag 3-P connector.

3. Remove the airbags:

Driver's Side:

- Remove the two TORX® bolts using a TORX® T30 bit, then remove the driver's airbag assembly.

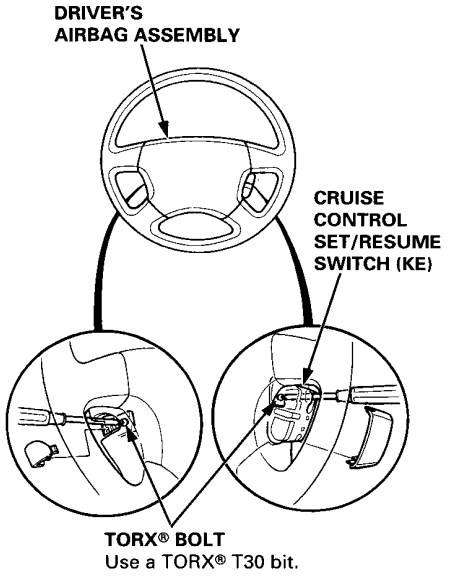

Front Passenger's Side:

CAUTION: Both the airbag mounting nuts and the joint bracket mounting nuts are salf-locking frange nuts, but their shapes and torques are different. Be careful not to confuse them. Also, use new nuts for reinstalling.

- Remove the four airbag mounting nuts, then lift the front passenger's airbag out of the module bracket.

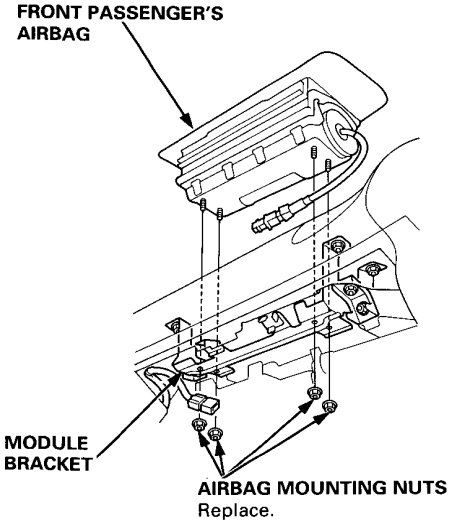

- Remove the four mounting nuts from the joint brackets, then remove the joint brackets.

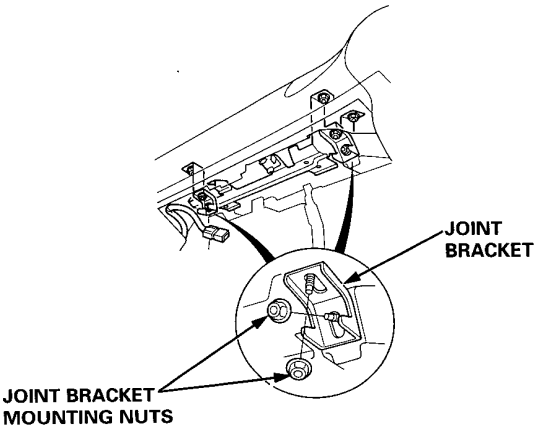

- Remove the four nuts, then remove the module bracket from the dashboard.

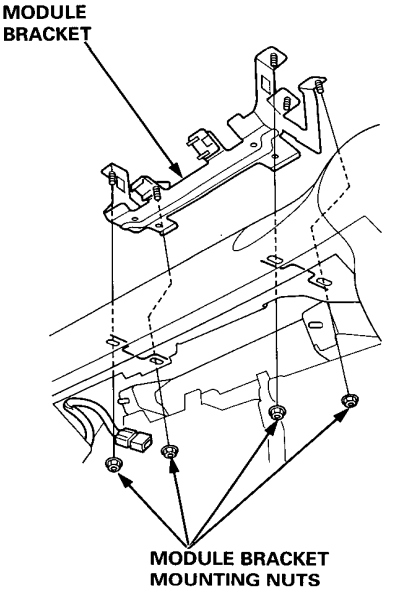

(cont'd)

Replacement (cont'd)

CAUTION: Be sure to install the SRS wiring so that it is not pinched or interfering with other car parts.

4. Install the new airbags.

Driver's Side:

- Place the driver's airbag assembly in the steering wheel, and secure it with new TORX® bolts.

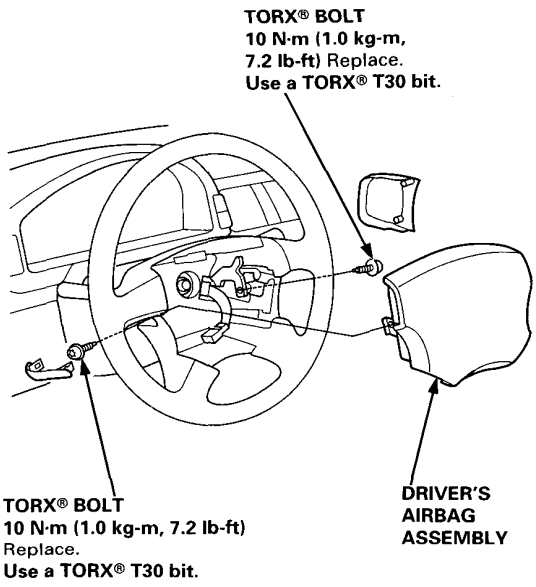

- Install the module bracket into the dashboard.

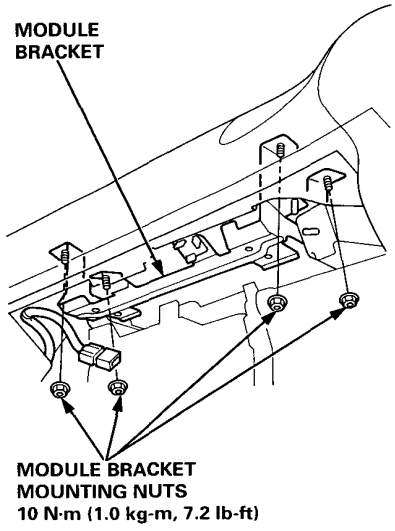

- Install the front passenger's airbag assembly on the module bracket, then install the joint brackets.

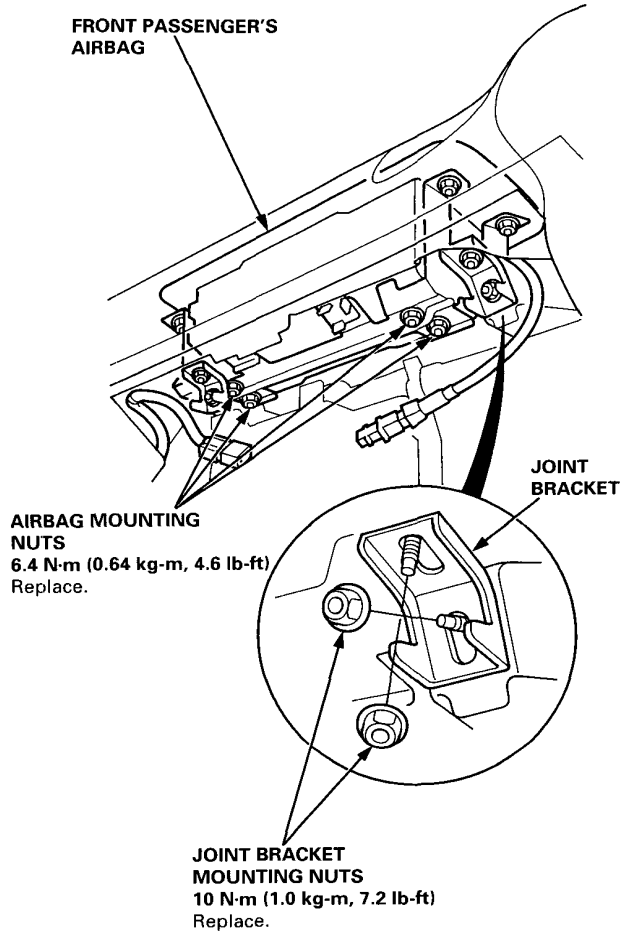

NOTE:

- If there remains some space between the airbag assembly lid and the dashboard after tightening the nuts, loosen the joint bracket mounting nuts, and lightly press down the airbag assembly. Then retighten the joint bracket mounting nuts.

5. Remove and properly store the short connectors, then reconnect the airbag connectors.

Front Passenger's Side:

- Attach the short connector (RED) to the connector holder.
- Then reinstall the glove box on the dashboard.

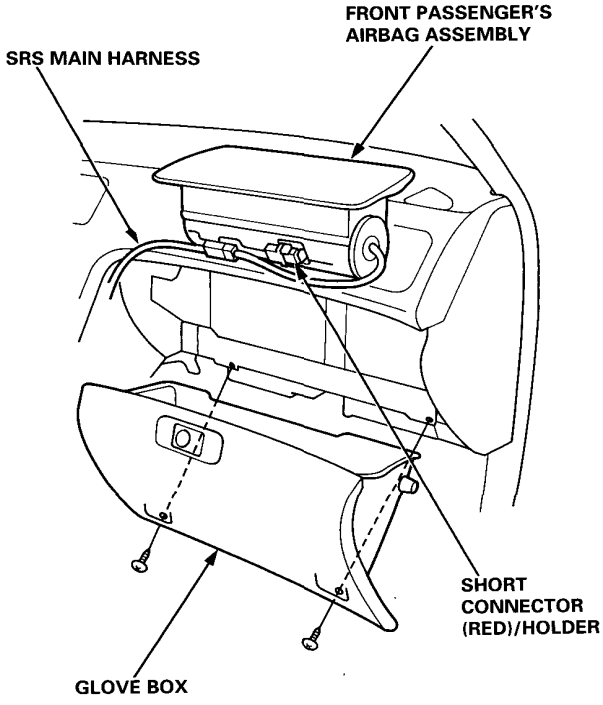

Driver's Side:

- Remove the short connector (RED) from the driver's airbag connector, then connect the airbag 3-P connector to the cable reel 3-P connector.

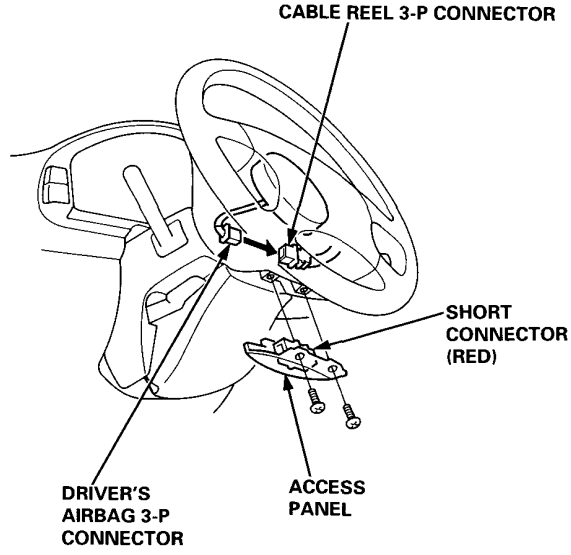

- Attach the short connector (RED) to the access panel, then reinstall the panel on the steering wheel.

6. Connect the battery positive cable, then the negative cable.

7. After installing the airbag assembly, confirm proper system operation:

   - Turn the ignition ON (II): The instrument panel SRS indicator light should come on for about six seconds and then go off.
   - Make sure both horn buttons work.
   - Take a test drive and make sure the cruise control switches work (KE model).

Disposal

Before scrapping any airbags (including those in a whole car to be scrapped) the airbags must be deployed. If the car is still within the warranty period, before you deploy the airbags the local Honda Service Manager must give approval and/or special instructions. Only after the airbags have been deployed (as the result of vehicle collision, for example), can they be scrapped.
If the airbags appear intact (not deployed) treat them with extreme caution.
Follow this procedure:

Deploying the Airbags: In-car

NOTE: If an SRS car is to be entirely scrapped, its airbags should be deployed while still in the car. The airbags should not be considered as salvageable parts and should never be installed in another car.

⚠WARNING Confirm that the airbag assemblies are securely mounted; otherwise, severe personal injury could result from deployment.

1. Disconnect the battery negative cable, then disconnect the positive cable and wait at least three minutes.

2. Confirm that the special tool is functioning properly by following the check procedure on the label of the tool set box, or on page 23-111.

Driver's Airbag:

3. Remove the access panel, then disconnect the 3-P connector between the driver's airbag and the cable reel.

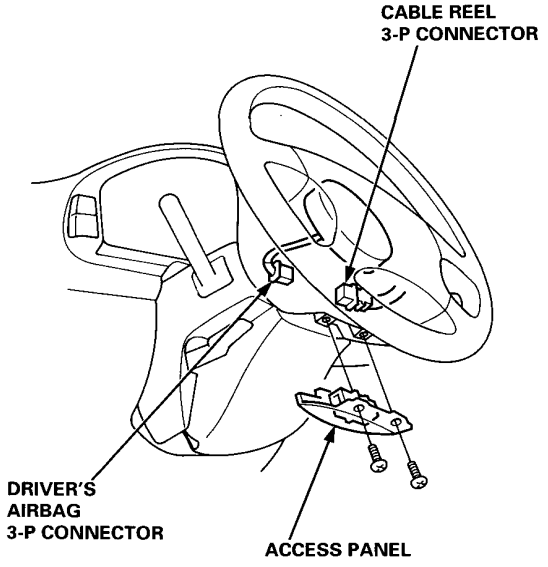

Front Passenger's Airbag:

4. Remove the glove box, then disconnect the 3-P connector between the front passenger's airbag and SRS main harness.

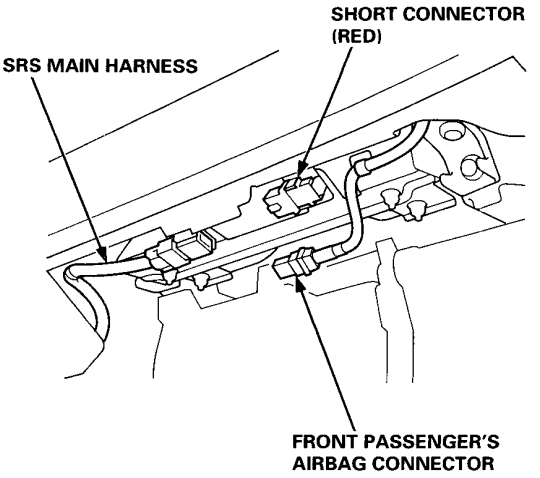

5. Cut off the airbag connector, strip the ends of the airbag wires, and connect the special tool alligator clips to the airbag. Place the special tool about 10 meters (thirty feet) away from the airbag.

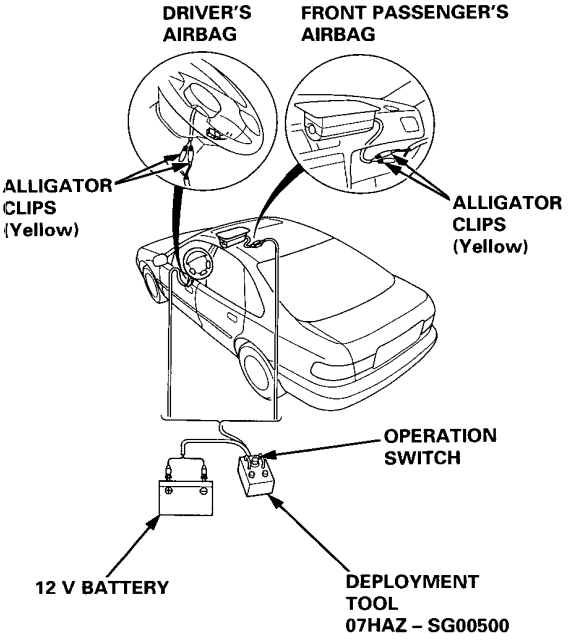

6. Connect a 12 volt battery to the tool:

   - If the green light on the tool comes on, the airbag igniter circuit is defective and cannot deploy the airbag. Go to Damaged Airbag Special Procedure.
   - If the red light on the tool comes on, the airbag is ready to be deployed.

7. Push the tool's deployment switch. The airbag should deploy (deployment is both highly audible and visible-a loud noise and rapid inflation of the bag, followed by slow deflation).

   - If audible/visible deployment happens and the green light on the tool comes on, continue with this procedure.
   - If the airbags don't deploy, yet the green light comes ON, the igniters are defective. Go to Damaged Airbag Special Procedure.

   ⚠WARNING During deployment, the airbag assembly can become hot enough to burn you.
   Wait thirty minutes after deployment before touching the assembly.

8. Dispose of the complete airbag assembly. No part of it can be reused. Place it in a sturdy plastic bag and seal it securely.

   CAUTION:
   - **Wear a face shield and gloves when handling a deployed airbag.**
   - **Wash your hands and rinse them well with water after handling a deployed airbag.**

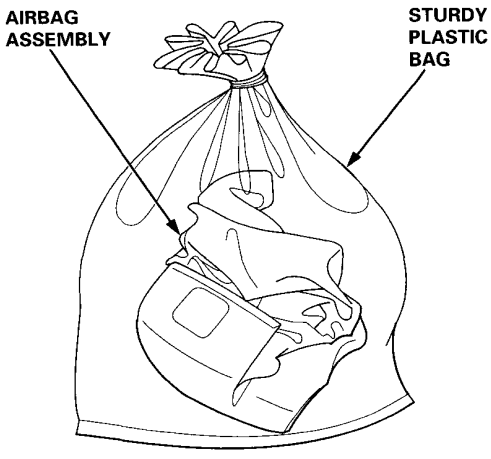

Deploying the Airbag: Out-of-car

NOTE: If an intact airbag assembly has been removed from a scrapped car or has been found defective or damaged during transit, storage or service, it should be deployed as follows:

⚠WARNING Position the airbag assembly face up, outdoors on flat ground at least 10 meters (30 ft) from any obstacles or people.

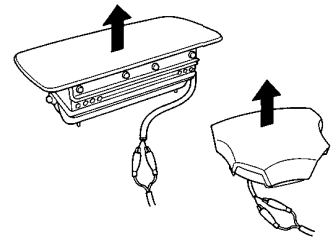

1. Confirm that the special tool is functioning properly by following the check procedure on this page or on the tool box label.

2. Remove the short connector from the airbag connector.

3. Follow steps 5, 6, 7, and 8 of the in-car deployment procedure.

Damaged Airbag Special Procedure

⚠WARNING If an airbag cannot be deployed, it should not be treated as normal scrap; it should still be considered a potentially explosive device that can cause serious injury.

1. If installed in a car, follow the removal procedure on page 23-106.

2. In all cases, make sure a short connector is properly installed on the airbag connector.

3. Package the airbag in exactly the same packaging that the new replacement part came in.

4. Mark the outside of the box "DAMAGED AIRBAG NOT DEPLOYED" so it does not get confused with your parts stock.

5. Contact your local Honda Service Manager for how and where to return it for disposal.

Deployment Tool: Check Procedure

1. Connect the yellow clips to both switch protector handles on the tool; connect the tool to a battery.

2. Push the operation switch: green means the tool is OK; red means the tool is faulty.

3. Disconnect the battery and the yellow clips.

Cable Reel (SRS-Type III)

Replacement

⚠WARNING Store a removed airbag assembly with the pad surface up. If the airbag is improperly stored face down, accidental deployment could propel the unit with enough force to cause serious injury.

CAUTION:

- **Carefully inspect the airbag assembly before installing it. Do not install an airbag assembly that shows signs of being dropped or improperly handled, such as dents, cracks or deformation.**
- **Always keep the short connectors on the airbags connector when the harness is disconnected.**
- **Do not disassemble or tamper with the airbag assembly.**

1. Disconnect the battery negative cable, then disconnect the positive cable and wait at least three minutes.
2. Make sure the wheels are aligned straight ahead.
3. Remove the dashboard lower cover.

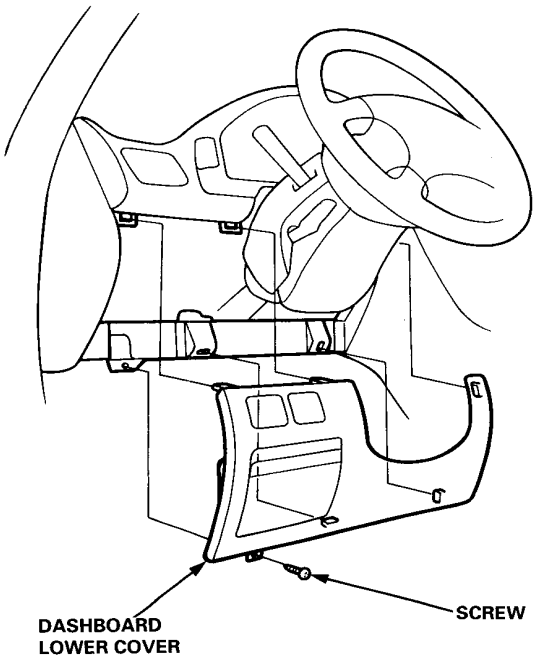

4. Connect the short connectors to the airbags (see page 23-75).

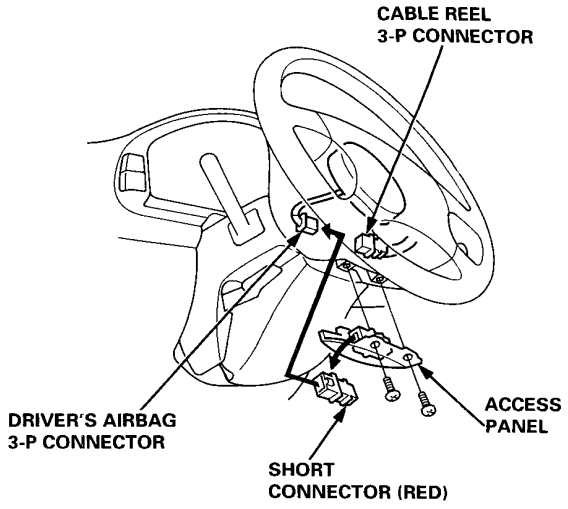

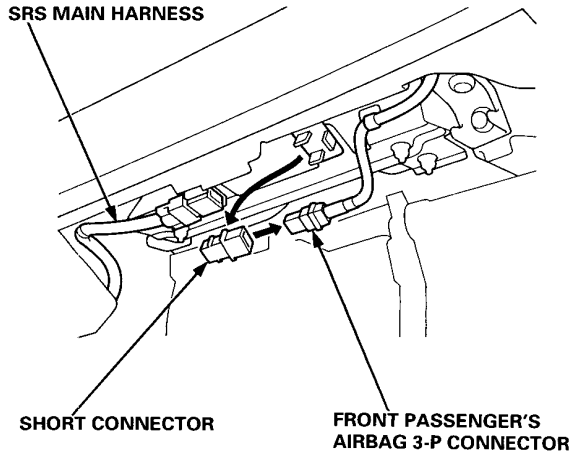

5. Remove the driver's airbag assembly from the steering wheel (two T30 TORX® bolts), then remove the steering wheel nut.

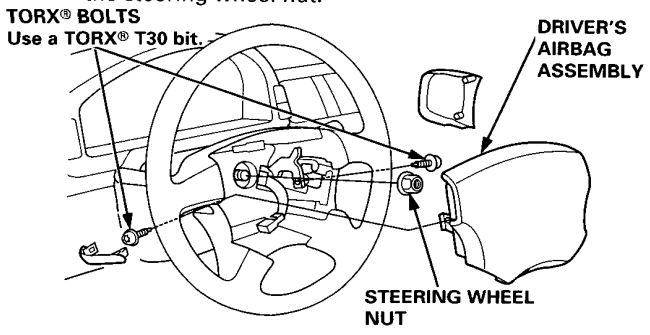

6. Disconnect the connectors from the horn and cruise control switches (KE model), then remove the cable reel 3-P connector from it's clip.

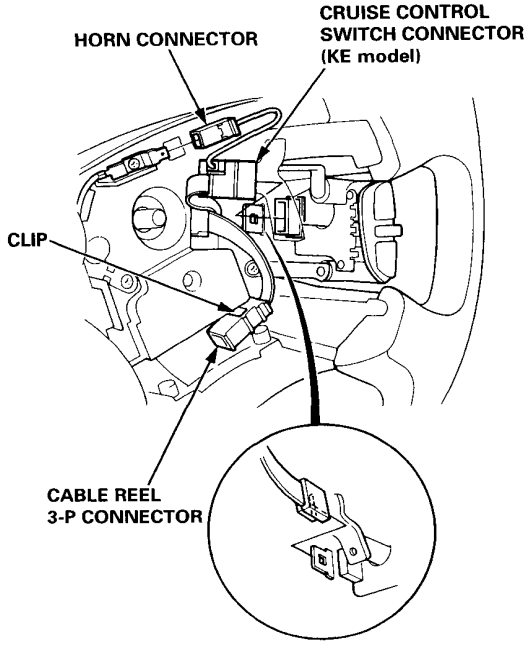

7. Remove the steering wheel from the column.

8. Remove the upper and lower column covers.

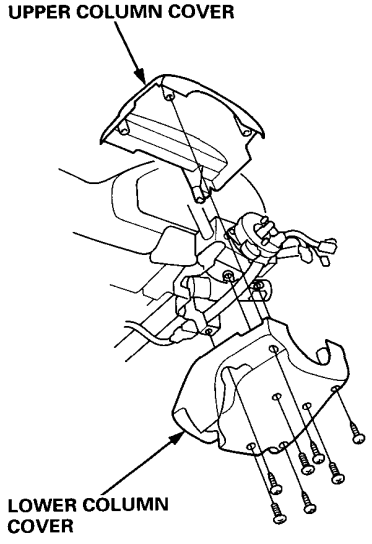

9. Disconnect the 6-P connector between the cable reel and SRS main harness, then remove the connector holder from the steering column.

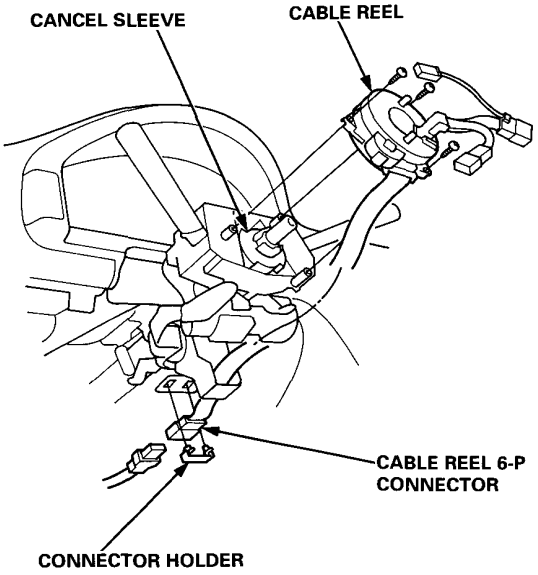

10. Remove the cable reel from the column.

(cont'd)

Replacement (cont'd)

CAUTION:

- **Before installing the steering wheel, the front wheels should be aligned straight ahead.**
- **Be sure to install the harness wires so that they are not pinched or interfering with other car parts.**
- **After reassembly, confirm that the wheels are still turned straight ahead and that steering wheel spoke angle is correct (road test). If minor spoke angle adjustment is necessary, do so only by adjustment of the tie-rods, not by removing and repositioning the steering wheel.**

11. Align the cancel sleeve grooves with the cable reel projections.

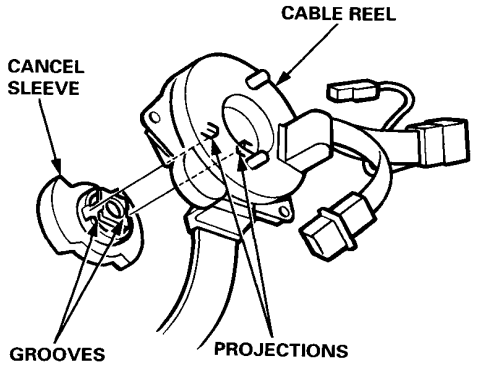

12. Carefully install the cable reel on the steering column shaft. Then attach the connector holder to the steering column.

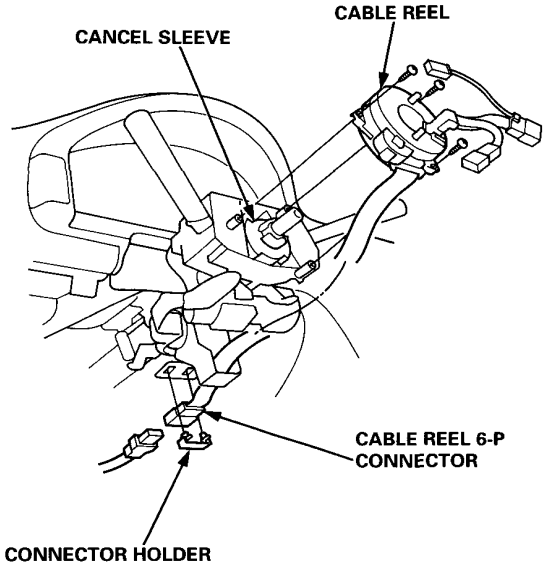

13. Install the steering column upper and lower covers.

14. Center the cable reel.
    Do this by first rotating the cable reel clockwise until it stops.
    Then rotate it counterclockwise (approximately two turns) until:

    - The yellow gear tooth lines up with the alignment mark on the cover.
    - The arrow mark on the cable reel label points straight up.

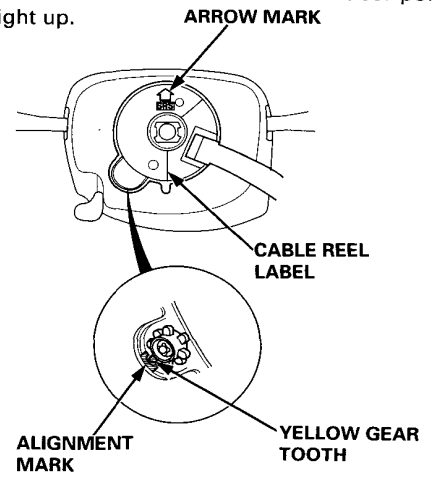

15. Install the steering wheel and attach the cable reel 3-P connector to the clip.

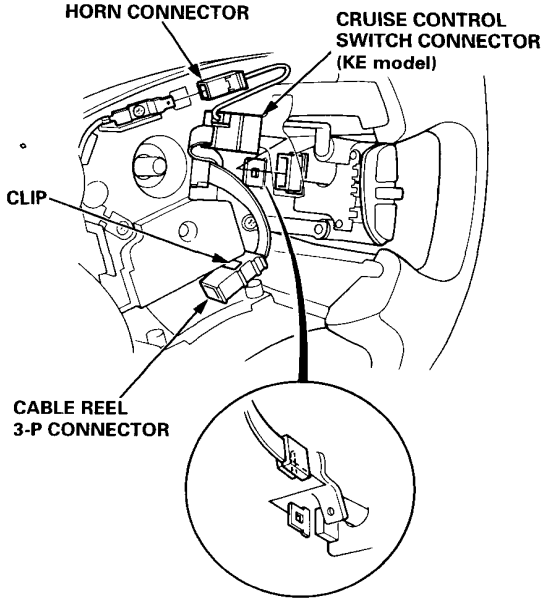

16. Connect the horn connector and cruise control switches connector.

17. Install the steering wheel nut.

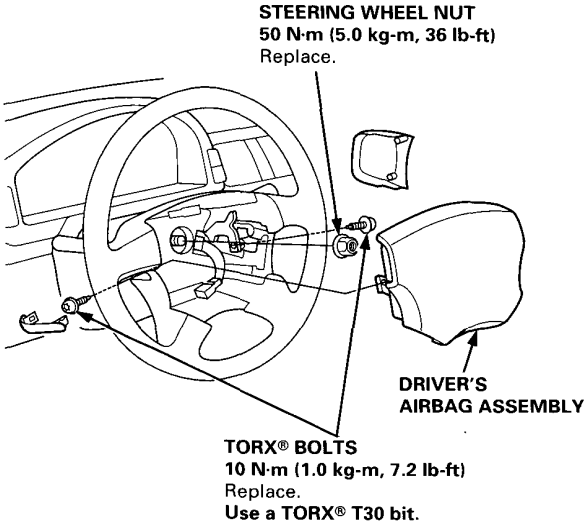

18. Install the driver's airbag assembly.

19. Connect the cable reel 6-P connector to the SRS main harness, then install the dashboard lower cover.

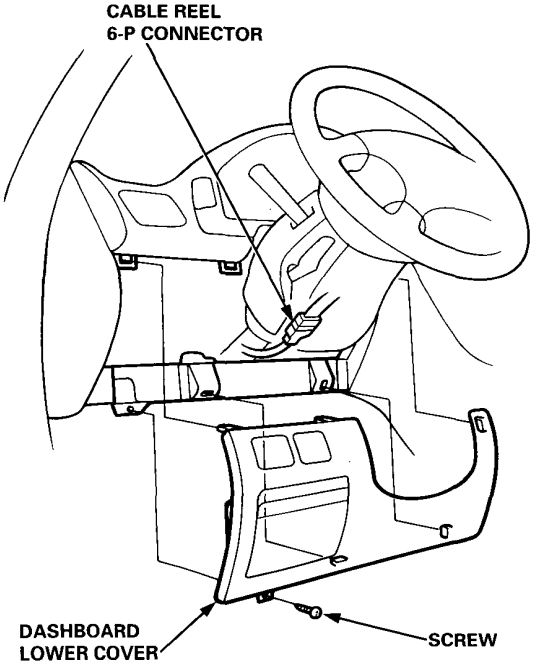

20. Remove and properly store the short connectors (RED), then reconnect the airbag connectors (and reinstall the glove box).

21. Reconnect the battery positive cable, then the negative cable.

22. After installing the cable reel, confirm proper system operation:

- Turn the ignition ON (II); the instrument panel SRS indicator light should come on for about six seconds and then go off.
- Make sure both horn buttons work.
- Make sure the headlight and wiper switches work.
- Go for a test drive and make sure the cruise control switches work (KE model).
- Rotate the steering wheel counterclockwise to make sure the yellow gear tooth lines up with the slot on the cover.

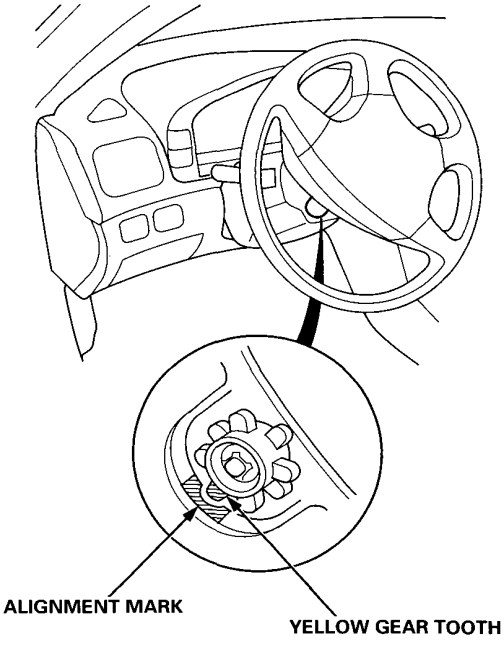

SRS Unit (SRS-Type III)

Replacement

CAUTION:

- **Before disconnecting any part of the SRS wire harness, install the short connectors (RED) on the airbags.**
- **During installation or replacement, do not bump (impact wrench, hummer etc.) the area near the SRS unit.**
- **Do not damage the SRS unit terminals or connectors.**
- **Do not disassemble the SRS unit; it has no serviceable parts.**
- **Store the SRS unit in a clean, dry area.**
- **Do not use any SRS unit which has been subjected to water damage or shows signs of being dropped or improperly handled, such as dents, cracks or deformation.**

1. Disconnect the battery negative cable, then disconnect the positive cable and wait at least three minutes.

2. Connect the short connectors to the airbags.

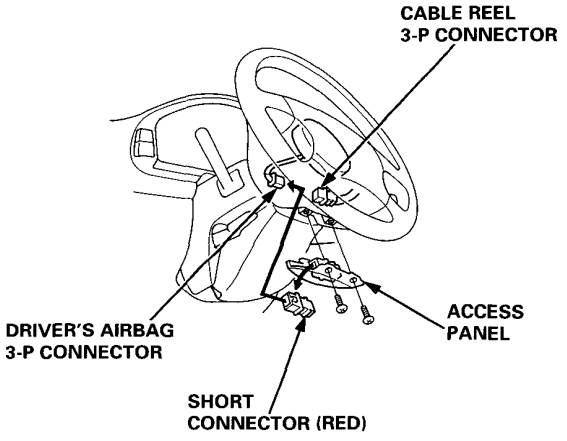

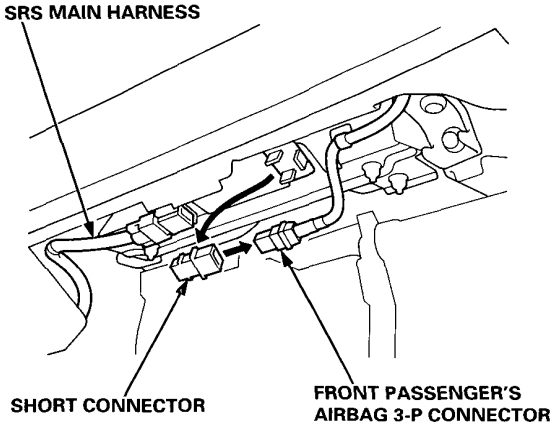

3. Pull down the carpeting from both sides of the heater unit and front console.

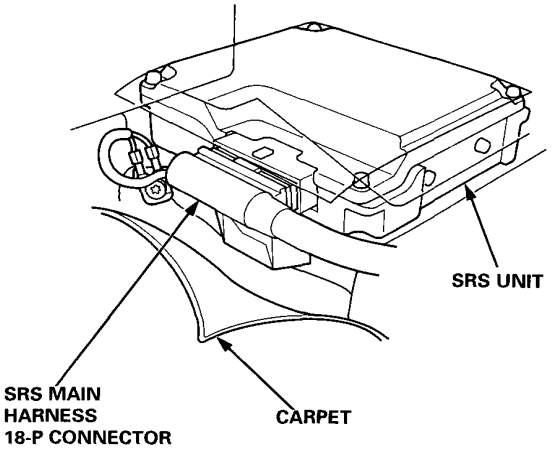

4. Disconnect the SRS main harness 18-P connector from the SRS unit.

5. Remove the four TORX® bolts from the SRS unit, then pull out the SRS unit from the driver's side.

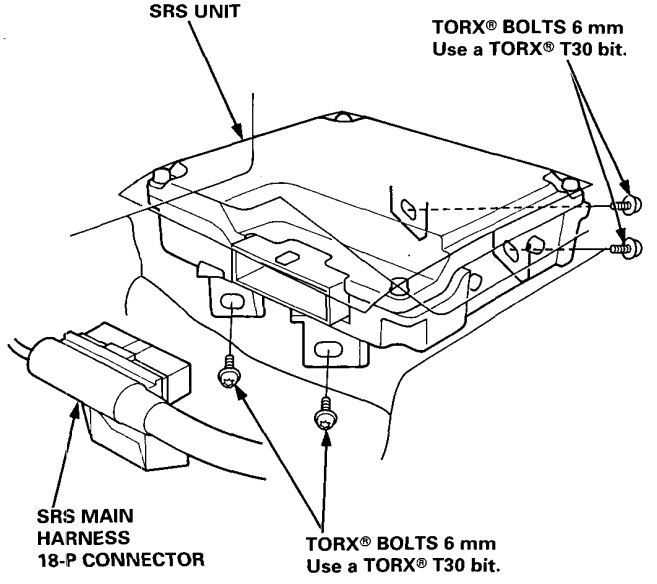

CAUTION:

- **Be sure to install the SRS wiring so that it is not pinched or interfering with other car parts.**
- **When tightening the TORX® bolts to the specified torque after replacement, be careful to turn them in so that their heads rest squarely on the brackets.**

6. Stick the SRS unit cover onto the upper surface of the new SRS unit, and install the new SRS unit.

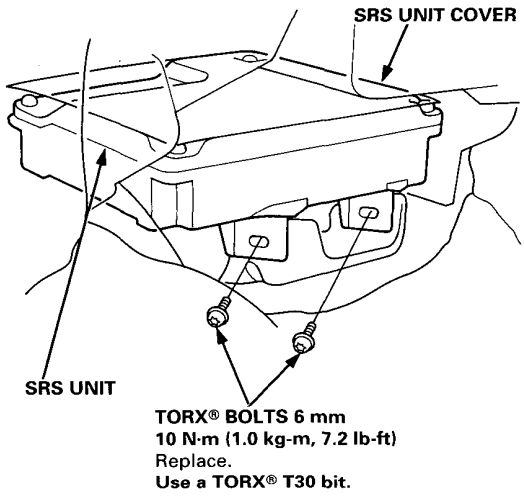

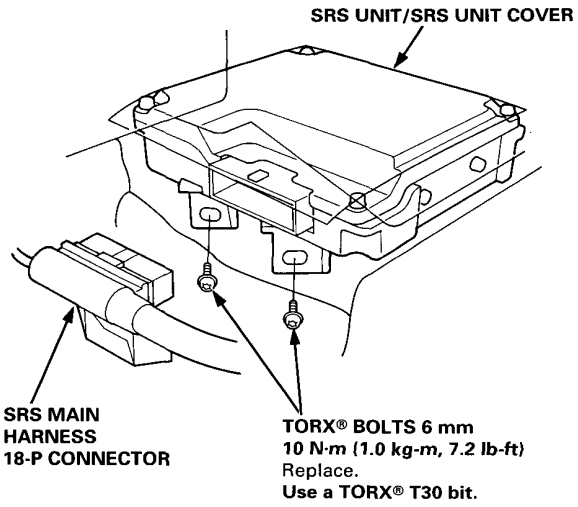

7. Connect the SRS main harness 18-P connector to the SRS unit; push it into position until it clicks.

8. Remove and properly store the short connectors (RED), then reconnect the airbag connectors (and reinstall the access panel and glove box).

9. Reconnect the battery positive cable, then the negative cable.

10. After installing the SRS unit, confirm proper system operation: Turn the ignition to ON (II); the instrument panel SRS indicator light should come on for about six seconds and then go off.